WATERMARK

BROOKLYN, NEW YORK

Sutton

111-7.1G-SP4

Deck Mounted, Two Handle, Gooseneck Faucet with Side Spray



- Side Spray Hose Length: 50” (Final Length May Vary)
- Fits Deck Up To 1-3/4” Thick
- Recommended Mounting Hole: 1-3/8”
- All Lead-Free Brass Construction
- Flow Rate: 1.75 GPM
- 1/4 Turn Ceramic Cartridge
- 360° Rotating Spout
- Professional Installation Required

Available in all finishes shown on the Watermark Designs website

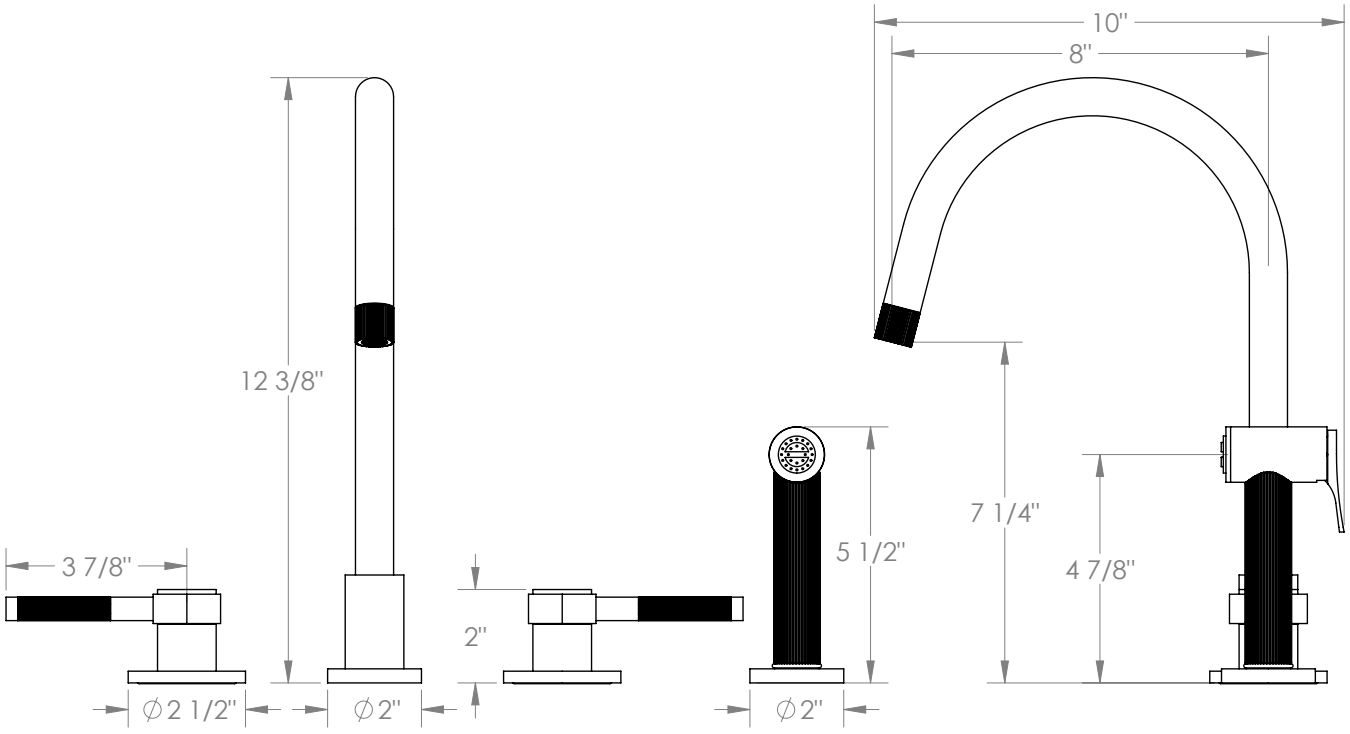

Meets the applicable requirements of ASME A112.18.1-2005/CSA B125.1-05, entitled “Plumbing Supply Fittings”.

Watermark Designs reserves the right to make revisions without notice to produce specifications. All product dimensions are nominal.

08/2024

350 Dewitt Ave. Brooklyn, NY 11207 USA | T: 1 718 257 2800 | F: 1 718 257 2144 | customerservice@watermark-designs.com