European grid drain 1 1/4" - Chrome

SERIES-VARIOUS

10 100 970 Product version from 10/1/2023



Fits: IMO, LULU, MADISON, MEM, TARA, CL.1, LISSÉ, VAIA, META, CYO

Chrome	10 100 970-00
Brushed Platinum	10 100 970-06
Platinum	10 100 970-08
Durabrass (23kt Gold)	10 100 970-09
Dark Chrome	10 100 970-19
Light Gold (PVD)	10 100 970-26
Brushed Light Gold (PVD)	10 100 970-27
Brushed Durabrass (23kt Gold)	10 100 970-28
Brushed Gold (PVD)	10 100 970-37
Brushed Dark Brass (PVD)	10 100 970-39
Brushed Bronze (PVD)	10 100 970-42
Brushed Dark Bronze (PVD)	10 100 970-43
Brushed Champagne (22kt Gold)	10 100 970-46
Champagne (22kt Gold)	10 100 970-47
Brushed Chrome	10 100 970-93
Brushed Dark Platinum	10 100 970-99

European grid drain 1 1/4" - Chrome

SERIES-VARIOUS

10 100 970 Product version from 10/1/2023

DORN BRACHT

European grid drain 1 1/4" - Chrome

SERIES-VARIOUS

10 100 970 Product version from 10/1/2023

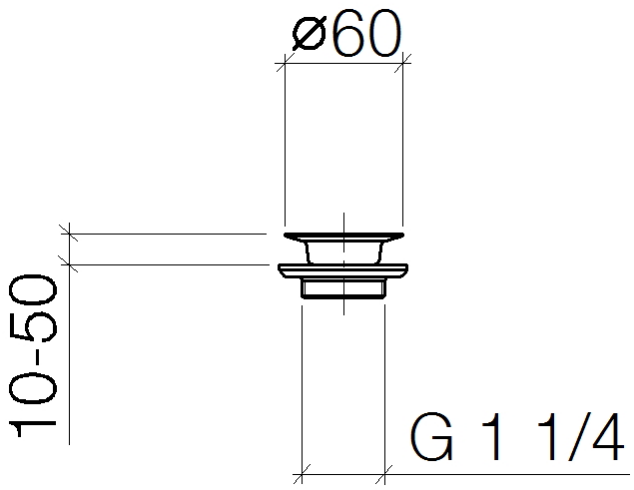

European grid drain 1 1/4" - Chrome

SERIES-VARIOUS

10 100 970 Product version from 10/1/2023

Parts for other finishes can be found here: Brushed Platinum

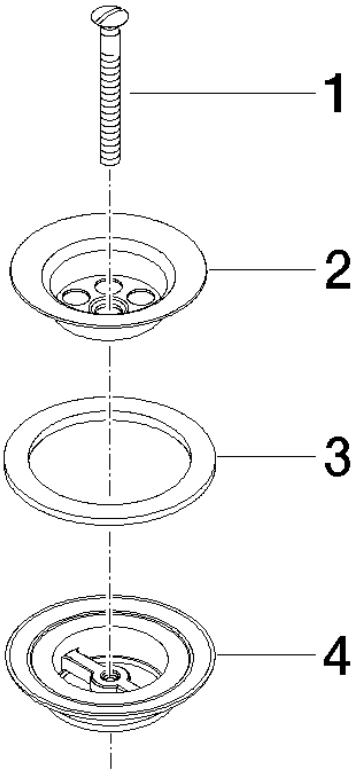

Spare parts list

Number	Item Number	Designation	Number of units	Lead time
3	09 14 03 005 90	seal	1.00	82
2	09 11 01 005-00	strainer	1.00	26
4	09 11 01 007-07	pop-up waste	1.00	82
1	09 30 30 115-00	screw	1.00	82