DURAVIT

Design Classics # 0335500000

Design by Norman Foster

Vessel Sink



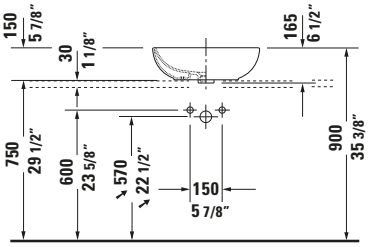

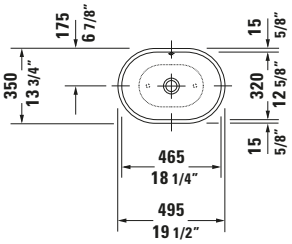

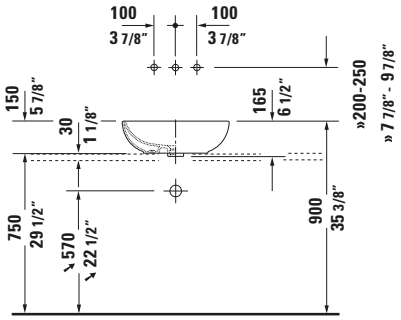

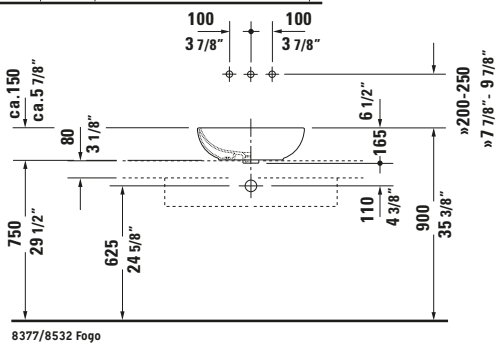

8377/8532 Fogo

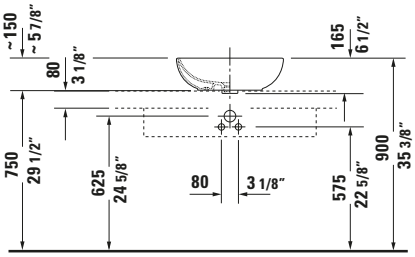

8377/8532 Fogo

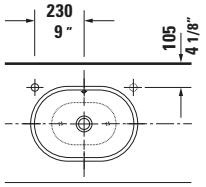

8532 Fogo

Basic information	
Long description	Duravit Design Classics Vessel Sink 19 1/2 " White High Gloss, Number of faucet holes: 0, Overflow – 0335500000

Features	
color	
color value	White
Interior color	White
Exterior color	White
Gloss level	High Gloss
Inside gloss level	High Gloss
Outside gloss level	High Gloss
Overflow	
Overflow	✓
Material	
Material	Ceramic
Relevant certificates	
cUPC listed	✓

Logistics	
Article weight	18.96 lb

Matching products	
Matching items	
	Sink Drain **# 005052** Universal
	P-Trap **# 005036** Universal

Description texts	
Tender text	Duravit Design Classics Vessel Sink White High Gloss 19 1/2 ", Designer: Norman Foster, Sanitary ware, Attachment, Overflow, Drain orientation: Middle, Number of basins: 1, Basin shape: Oval, Basin position: Middle, Faucet hole position: None, White High Gloss, Suitable for furniture, CE-number plate-1: EN 14688, EAN No.: 4021534333583, Article weight: 18.96 lb, Diameter: 0 ", Basin width: 18 1/4 ", Basin Depth: 5 1/8 ", Dimensions (Width / Length x Depth/width x Height): 19 1/2 " x 13 3/4 " x 6 1/2 ", Article No.: 0335500000

All drawings contain the necessary measurements which are subject to standard tolerances. They are stated in mm and are non-binding. Exact measurements, in particular for customised installation scenarios, can only be taken from the finished piece.

Design Classics # 0335500000

Design by Norman Foster

Vessel Sink

You can find more information here

https://pro.duravit.us/p/0335500000

All drawings contain the necessary measurements which are subject to standard tolerances. They are stated in mm and are non-binding. Exact measurements, in particular for customised installation scenarios, can only be taken from the finished piece.