mm [inches]
1:5

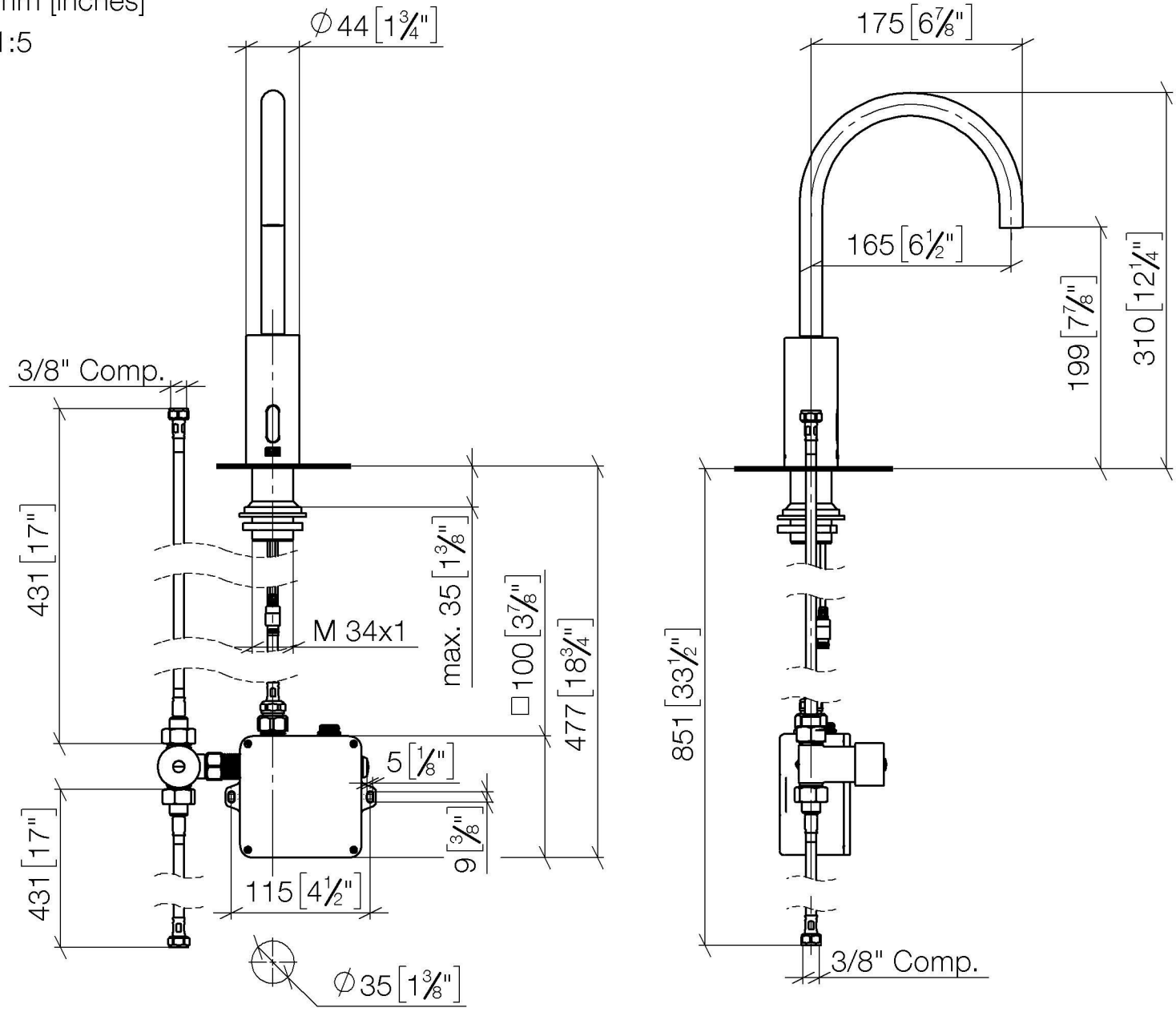
Ø44 [1¾"]
175 [6⅞"]
165 [6½"]
199 [7⅞"]
310 [12¼"]
3/8" Comp.
431 [17"]
M 34x1
max. 35 [1⅜"]
□100 [3⅞"]
477 [18¾"]
851 [33½"]
5 [⅛"]
9 [⅜"]
431 [17"]
115 [4½"]
Ø35 [1⅜"]
3/8" Comp.