mm [inches]
1:5

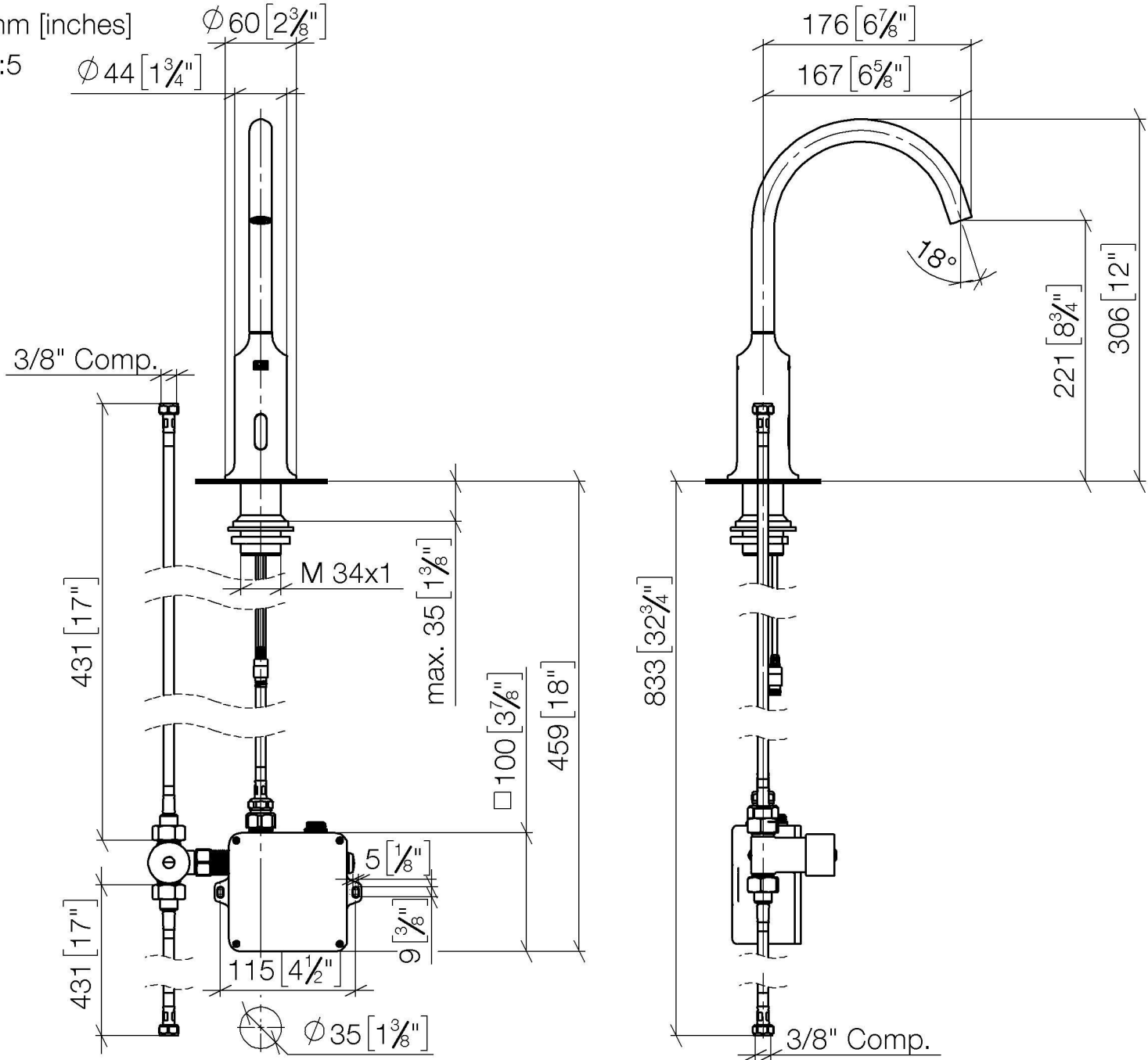
Ø60 [2 3/8"]
Ø44 [1 3/4"]
3/8" Comp.
M 34x1
max. 35 [1 3/8"]
431 [17"]
□100 [3 7/8"]
459 [18"]
5 [1/8"]
9 [3/8"]
115 [4 1/2"]
431 [17"]
Ø35 [1 3/8"]
176 [6 7/8"]
167 [6 5/8"]
18°
221 [8 3/4"]
306 [12"]
833 [32 3/4"]
3/8" Comp.