Kräus®

INSTALLATION MANUAL

Bolden™ Single Handle Pull Down Kitchen Faucet

KPF-1610

 © 2024 Kraus USA Plumbing LLC I Rev. JUN 21, 2024

Congratulations on the purchase of your new Kraus® plumbing fixture!

Please keep the box and packaging materials until your product is completely installed. If you have any questions, require technical assistance or have any problems with your product:

STOP **DO NOT RETURN TO STORE**

Please contact our Customer Service Team
1-800-775-0703 / customerservice@kraususa.com

Have the model number available and retain a copy of your receipt with purchase date for reference.

If for any reason this product does not meet your expectations, please be sure to repack this product in the original box and packaging material to avoid damage during transit.

STOP

Prior to Installation:

- Make sure you have all necessary parts by checking the diagram and parts list. If any part is missing or damaged, please contact Kraus® Customer Service at 800-775-0703 for a replacement.
- Read all instructions and safety warnings and ensure you have all tools, parts, and equipment necessary for a safe installation.
- Turn off the hot and cold water supply at the angle stops and turn on the old faucet to release any built up pressure. Remove existing faucet.
- Pre-drilled hole size requirement: 1 3/8" (min)
- Max countertop thickness: 3 3/8”

For technical assistance or replacement parts, please contact Kraus Customer Service and one of our representatives will be happy to help:
Toll-Free: 800-775-0703 or Customerservice@kraususa.com

Tools Required

Adjustable Wrench

Phillips Screwdriver

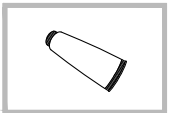
Silicone Sealant

Safety Goggles

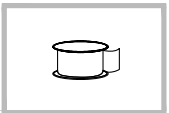
Pipe Tape

Care & Maintenance

* To keep the product clean & shining, follow the steps below:

1. Rinse with clean water & dry with a soft cloth
2. Do not clean with soaps, acid, polish, abrasives or harsh cleaners
3. Do not use cloth with a coarse surface
4. Unscrew the aerator and clean when necessary

* This installation manual is subject to change without further notice.

Diagram and Parts List

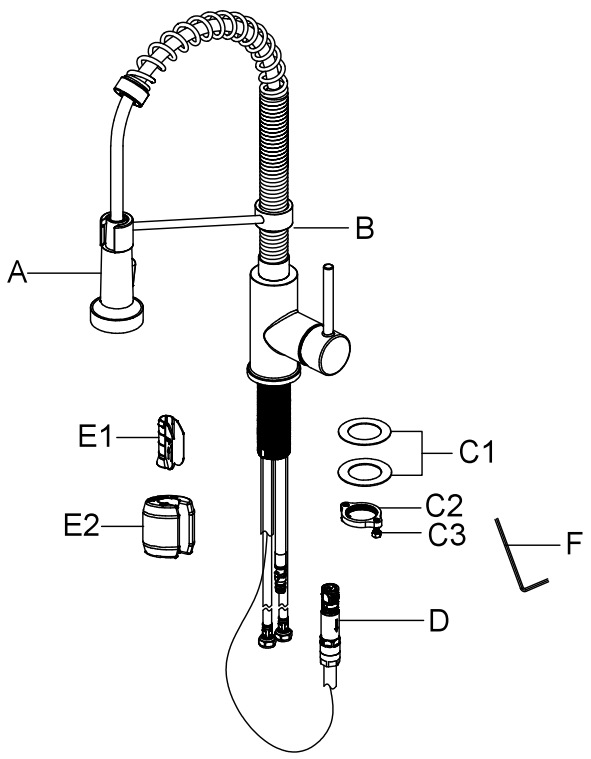

A. Spray Head
B. Faucet Body
C. Mounting Hardware
   C1. Rubber & Metal Washer
   C2. Mounting Nut
   C3. Mounting Screws
D. Quick Connector
E. Weight
   E1. Weight Clip
   E2. Weight
F. 2.5mm Hex Wrench

Faucet Dimensions

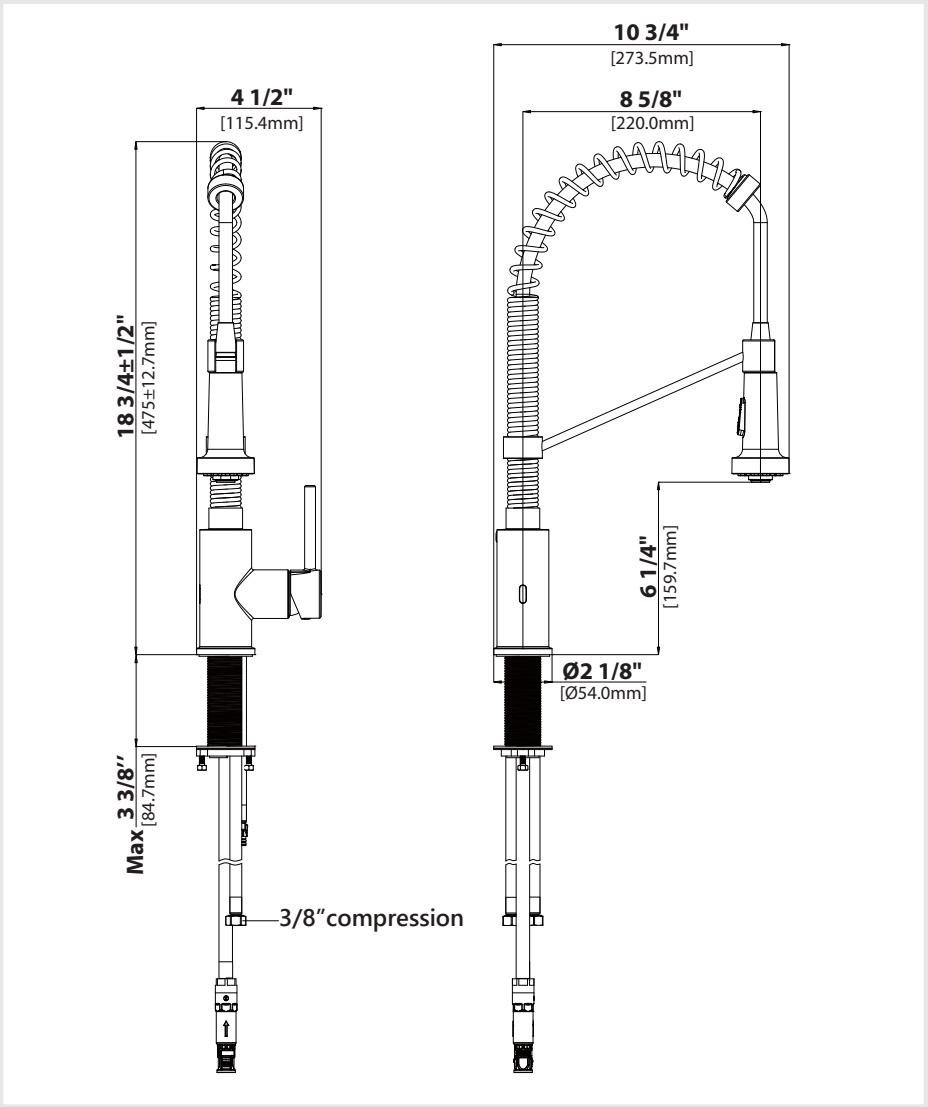

Installer Tip:

Shut off main water supply before installing new faucet.

Step 1. Remove mounting hardware

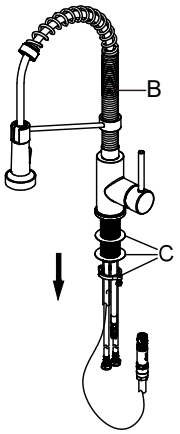

Shut off the water supply. Remove the old faucet. Clean the mounting surface. Remove mounting hardware (C) from faucet body (B).

Step 2. Installing the faucet assembly

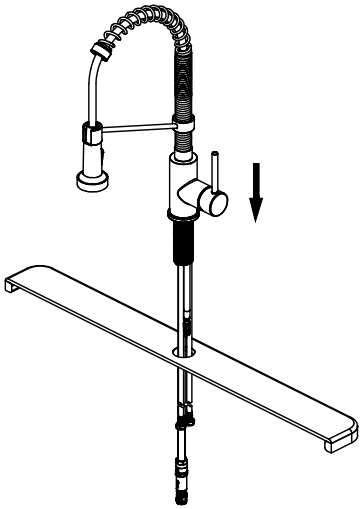

Optional No Escutcheon Installation. Insert faucet body through the hole in the sink or countertop.

Step 3. Securing the faucet assembly

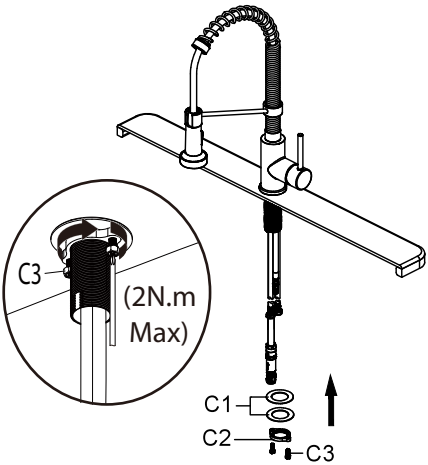

Install the rubber washer and metal washer (C1) onto the threaded mounting shank. Thread the nut (C2) onto the mounting shank. Lock the nut (C2) into position by tightening the screws (C3). Do not overtighten.

Step 4. Securing the faucet assembly

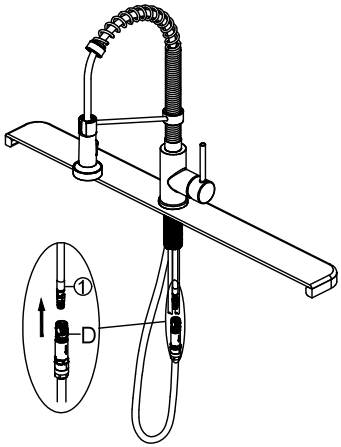

Push the quick connector (D) firmly upward and attach it to the receiving block (1). Pull down moderately to ensure the connection has been made.

Step 5. Installing the counterweight

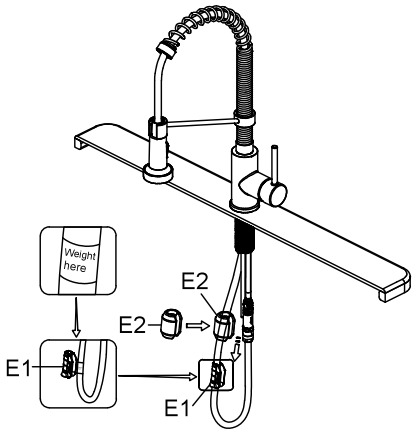

Install the weight clip (E1) at the point of the hose marking "weight here". Insert the weight (E2) onto the clip (E1) by sliding it down onto the clip (E1).

Step 6. Making the waterline connections

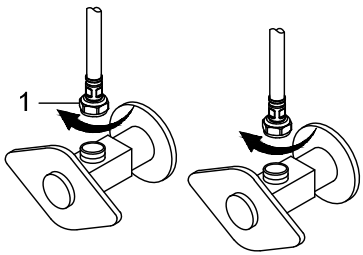

Thread the nut (1) on the supply line onto the outlet of the water supply valve and tighten with a wrench. Do not overtighten.

NOTE: Please make sure filter washers are installed before connecting to the main valve.

Step 7. Flushing and checking for leaks

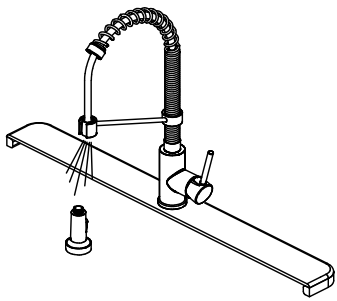

Pull the hose assembly out of the spout and remove the spray head by unscrewing it from the hose in a counterclockwise direction. Be sure to hold the end of the hose down into the sink and turn the faucet on to the warm position where it mixes hot and cold water. Flush the water lines for one minute. This flushes away any debris that could cause damage to internal parts. Check for leaks. Retighten any connections if necessary, but do not overtighten. Reinstall the spray head by hand tightening it back onto the spray hose. After installation is completed, turn on the hot and cold water supplies. Check for leaks.

Replacement Parts

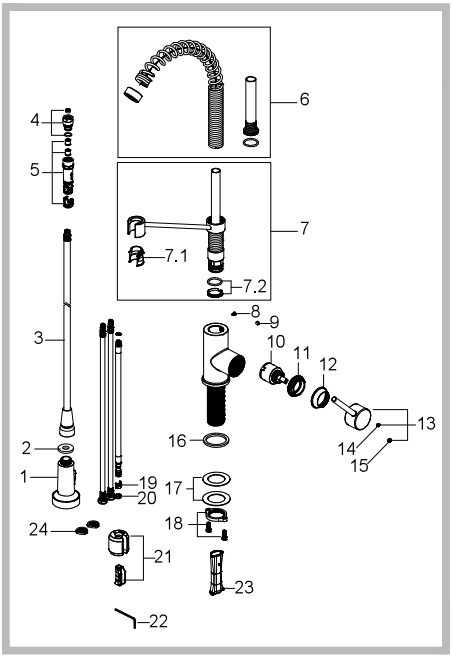

Replacement Parts List	Finish/Color	Part #
1. Sprayer	CH,SFS,SS,SB,MB,SFSB,BG,BB SFACB,SFACBMB,BGMB**	KP27216
2. Screen Washer		KP27208
3. Sprayer Hose	BLBG,BLMB,BLSFS,BLSS,GRCH BLSFACB,GRSFS,GRSS,BLBB*	KP27247
4. Flow Regulator Assembly (1.8GPM)	WH**	KP27074
5. Quick Connector Assembly		KP27090
6. Spring Assembly	CH,MB,SB,SFS,BG,SS,SFSB**	KP27220
6. Spring Assembly	SFACB,BB**	KP27322
7. Sprayer Holder Assembly	CH,SFS,SS,SB,SFSMB,BG,SFACB,BB MB,SFACBMB,BGMB,SFSB,MBSB, SFSCH,SSCH,SSMB,MBSFSB,BBMB**	KP27218
7.1. Inverter		KP27245
7.2. Wearable Ring & O-ring Assembly		KP27085
8. Set Screw		KP27084
9. Index	BL,GR**	KP27124
10. Cartridge Kerox K-35		KP27083
11. Bonnet Nut		KP27082
12. Cap	CH, SFS, SS, SB, MB, BG, SFACB, SFSB, BB**	KP27081
13. Handle Assembly	CH, SFS, SS, SB, MB, BG, SFACB, SFSB, BB**	KP27072
14. Set Screw		KP27001
15. Cover Button	BL,GR**	KP27002
16. Washer		KP27091
17. Rubber & Metal Washer		KP27028
18. Mounting Nut & Screws		KP27079
19. Block		KP27073
20. O-ring		KP27092
21. Weight & Clip Assembly		KP27236
22. Hex Wrench		KP27020
23. Inverter		KP27123
24. Filter Washers		KP27167

*Denotes spray hose assembly color options:
Spray hose assembly color options: Black hose w/Brushed Gold connector (BLBG), Black hose with Spot-Free Stainless connector (BLSFS), Gray hose with Chrome connector (GRCH), Gray hose with Spot-Free Stainless connector (GRSFS), Gray hose with Stainless Steel connector (GRSS), Black hose with Matte Black connector (BLMB), Black hose with Stainless Steel connector (BLSS), Black hose with Spot-Free Antique Champagne Bronze (BLSFACB), Black hose with Brushed Brass (BLBB)

**Denotes faucet component color options:
CH - Chrome
SFS - Spot Free Stainless Steel
SS - Stainless Steel
MB - Matte Black
BG - Brushed Gold
SB - Black Stainless
BB - Brushed Brass
MBSFSB - Matte Black/Spot Free Black Stainless
SFACB - Spot Free Antique Champagne Bronze
MBSB - Matte Black/Black Stainless
SFSCH - Spot Free Stainless Steel/Chrome
BGMB - Brushed Gold/Matte Black
SFSB - Spot Free Black Stainless
SFSMB - Spot Free Stainless Steel/Matte Black
SSMB - Stainless Steel/Matte Black
SSCH - Stainless Steel/Chrome
BBMB - Brushed Brass/Matte Black
SFACBMB - Spot Free Antique Champagne Bronze/Matte Black
BL - Black WH - White GR- Grey

Troubleshooting

If you have followed the instructions carefully and your faucet still does not work properly, take the following corrective steps:

PROBLEM	CAUSE	ACTION
Leakage under faucet handle	Bonnet nut (11) has come loose	Remove the cover button (15). Loosen set screw (14) with hex wrench (22). Remove the handle. Unscrew cap (12). Tighten bonnet nut (11) with an adjustable wrench.
The aerator has an irregular or reduced water flow	The aerator is dirty or mis-fitted	Remove the aerator and check for debris. Ensure that the rubber washer is properly installed.
The water pressure is low.	The connector underneath the deck is clogged with debris The aerator is clogged	Turn off the water supply and disconnect the connector / aerator. Unscrew the connector / aerator and clean under running water. Screw the connector / aerator back. Test water flow. If water pressure is still low then replace the connector / aerator.
There is a low flow of water.	The screen filters in the hose connectors are dirty.	Turn off the water supply at the water valves and unscrew the hose connectors from the water supply lines. Clean the screens in the water lines with hot water, removing any debris or calcium build up.

Codes/Standards Applicable:

NSF/ANSI 372 NSF/ANSI/CAN 61: Q ≤ 1 LEAD FREE

NSF/ANSI 61

ASME A112.18.1
1.8GPM 6.8L/min maximum

Faucet - Lifetime Limited Warranty

Kraus USA Plumbing, LLC ("Kraus") extends this warranty to the original purchaser for personal household use of the Faucet when purchased from an authorized Kraus dealer and in the location of original installation. This warranty is non-transferable.

Kraus warrants the structure and finish of the Faucet to be free from defects in material and workmanship under normal usage for as long as the original purchaser resides in the residence in which the Faucet was first installed.

Kraus warrants the Faucet's sprayhead assembly (including the engine, aerators, structure, restrictors, back flow preventers, sprayer hoses, braided supply line hoses which encompasses nylon, silicon and stainless steel) of the product to be free from defects in material and workmanship under normal usage for a period of one (1) year from the date of purchase.

Kraus warrants the Faucet's cartridge to be free from defects in material and workmanship under normal usage for a period of five (5) years from the date of purchase.

Any product reported to the authorized dealer or to Kraus as being defective within the warranty period will be repaired or replaced with a product of equal value at the option of Kraus.

Commercial Warranty

Kraus USA Plumbing, LLC ("Kraus") warrants its Products for a period of one (1) year to commercial purchasers of Products used in industrial, commercial and business applications.

Care and Cleaning Instructions

Certain cleaning products may cause damage to a Product's finish and use of the following on the Product will void this warranty:

- Abrasive cleaners such as powders, bleach, ammonia, alcohol or chorine
- Abrasive pads, steel wool or wire brushes

What is Not Covered

This warranty does not cover Products that were discontinued when purchased or display Products, whether such Products were purchased at discount outlets, unauthorized dealers, and/or sold on clearance. This warranty does not cover any free gifts included with purchase.

This warranty does not cover damage resulting from neglect, misuse (including use for an unintended application), abuse, carelessness, accident, hard water or mineral deposits, exposure to corrosive materials, improper maintenance, alteration of the Product, or failure to follow care, cleaning or installation instructions enclosed with your Product. Kraus recommends that all Kraus Products be installed by a fully licensed and insured trade professional with experience in the installation of bathroom and/or kitchen manufactured goods.

How to Make a Warranty Claim

If you are a **consumer purchaser**, please contact a Kraus® Customer Service Representative at:
Kraus USA Plumbing, LLC
12 Harbor Park Drive
Port Washington, NY 11050
Toll-free 800-775-0703
Customerservice@kraususa.com

If you are a **plumbing contractor or trade professional**, please contact a Kraus Pro Representative at:
Kraus USA Plumbing, LLC
12 Harbor Park Drive
Port Washington, NY 11050
516-801-8955
Proservice@kraususa.com

If you are an **authorized partner**, please contact a Partner Support Representative at:
Kraus USA Plumbing, LLC
12 Harbor Park Drive
Port Washington, NY 11050
516-801-8954
Partnersupport@kraususa.com

In requesting warranty service, please be ready to provide your proof of purchase and a description of the problem. Shipping charges will be covered for the first (1) year of the warranted replacement part or product (HI, AK, and Puerto Rico shipping charges may apply). International shipping fees are not included.

Limitation on Duration of Implied Warranties

Please note that some states/provinces (including Quebec) do not allow limitations on how long an implied warranty lasts, so the below limitations may not apply to you. TO THE MAXIMUM EXTENT PERMITTED BY APPLICABLE LAW, ANY IMPLIED WARRANTY, INCLUDING THE IMPLIED WARRANTIES OF MERCHANTABILITY AND OF FITNESS FOR A PARTICULAR PURPOSE, IS LIMITED TO THE STATUTORY PERIOD OR THE DURATION OF THIS WARRANTY, WHICHEVER IS SHORTER.

Limitation of Special, Incidental or Consequential Damages

Please note that some states/provinces (including Quebec) do not allow the exclusion or limitation of special, incidental or consequential damages, so the below limitations and exclusions may not apply to you. TO THE MAXIMUM EXTENT PERMITTED BY APPLICABLE LAW, THIS WARRANTY DOES NOT COVER, AND KRAUS USA PLUMBING, LLC SHALL NOT BE LIABLE FOR, ANY SPECIAL, INCIDENTAL OR CONSEQUENTIAL DAMAGES (INCLUDING LABOR CHARGES TO REPAIR, REPLACE, INSTALL OR REMOVE THIS PRODUCT), WHETHER ARISING OUT OF BREACH OF ANY EXPRESS OR IMPLIED WARRANTY, BREACH OF CONTRACT, TORT, OR OTHERWISE.

This warranty gives you specific legal rights, and you may also have other rights which vary from state/province to state/province.

Download the Kraus Care & Maintenance Guide at:
http://www.kraususa.com/maintenance

IMPORTANT

Register Your Kraus Product

Activate Your Warranty

Access Premium Customer Support

Get Product Information

REGISTER TODAY

http://www.kraususa.com/registration

Kraus®

www.kraususa.com

Kräus®

INSTALLATION MANUAL

Bolden™ Single Handle Water Filtration Faucet

FF-104

 © 2023 Kraus USA Plumbing LLC I Rev. March 20, 2023

Congratulations on the purchase of your new Kraus® plumbing fixture!

Please keep the box and packaging materials until your product is completely installed. If you have any questions, require technical assistance or have any problems with your product:

STOP **DO NOT RETURN TO STORE**

Please contact our Customer Service Team
1-800-775-0703 / customerservice@kraususa.com

Have the model number available and retain a copy of your receipt with purchase date for reference.

If for any reason this product does not meet your expectations, please be sure to repack this product in the original box and packaging material to avoid damage during transit.

STOP

Prior to Installation:

- Make sure you have all necessary parts by checking the diagram and parts list. If any part is missing or damaged, please contact Kraus® Customer Service at 800-775-0703 for a replacement.
- Read all instructions and safety warnings and ensure you have all tools, parts, and equipment necessary for a safe installation.
- Turn off the hot and cold water supply at the angle stops and turn on the old faucet to release any built up pressure. Remove existing faucet.
- Pre-drilled hole size requirement: 1 1/4" (min)
- Max countertop thickness: 3 1/16”

For technical assistance or replacement parts, please contact Kraus Customer Service and one of our representatives will be happy to help:
Toll-Free: 800-775-0703 or Customerservice@kraususa.com

Tools Required

Adjustable Wrench

Phillips Screwdriver

Silicone Sealant

Safety Goggles

Supply Lines

Care & Maintenance

* To keep the product clean & shining, follow the steps below:

1. Rinse with clean water & dry with a soft cloth
2. Do not clean with soaps, acid, polish, abrasives or harsh cleaners
3. Do not use cloth with a coarse surface
4. Unscrew the aerator and clean when necessary

* This installation manual is subject to change without further notice.

Diagram and Parts List

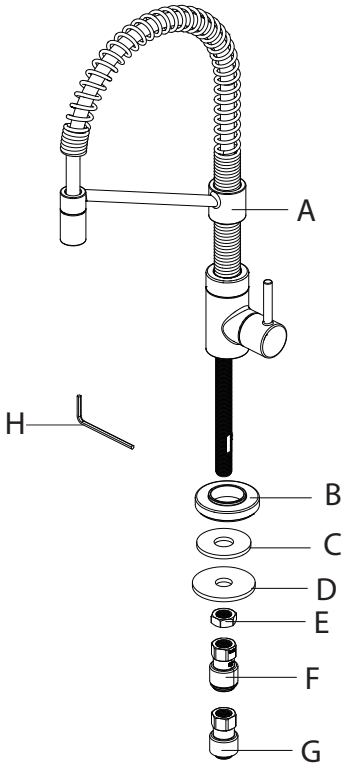

A. Faucet Assembly
B. Flange
C. Rubber Washer
D. Metal Washer
E. Mounting Nut
F. 3/8 in. Connector
G. 1/4 in. Connector
H. Hex Wrench

Faucet Dimensions

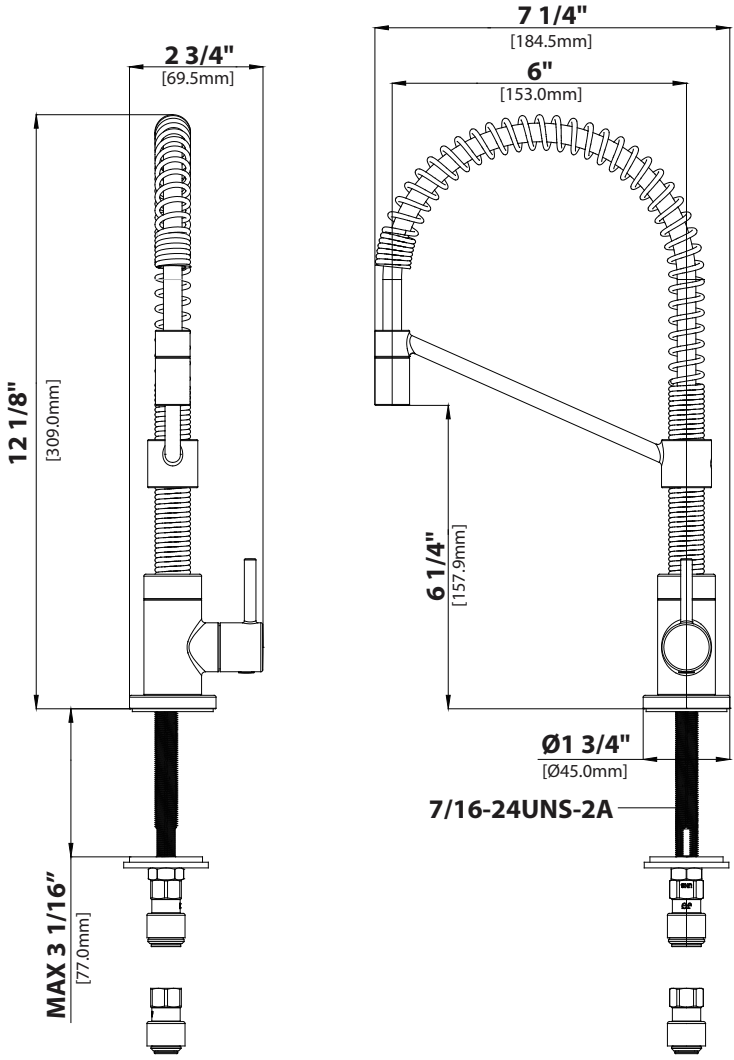

Installer Tip:

Shut off main water supply before installing new faucet.

Step 1: Preparing for installation

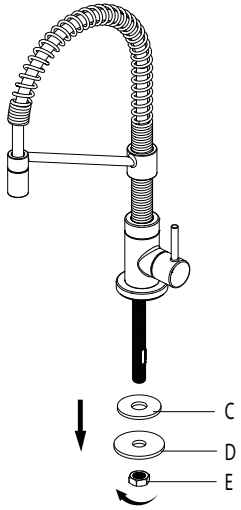

Remove the rubber washer (C), metal washer (D), and mounting nut (E) from the end of the stud.

Step 2: Installing the faucet assembly

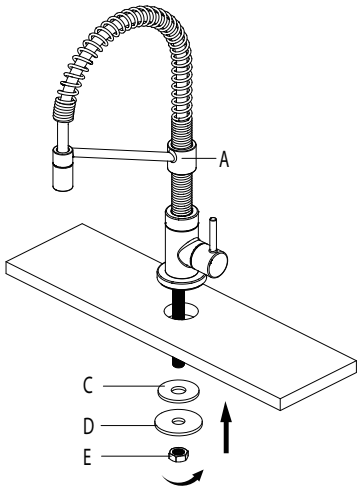

Place the faucet assembly (A) through the selected hole in the sink or countertop. On the underside of the sink or countertop, slide the rubber washer (C) and metal washer (D) onto the stud. Thread the mounting nut (E) onto the stud, and tighten securely using your wrench.

Step 3: Connecting the quick connect adaptor and water line

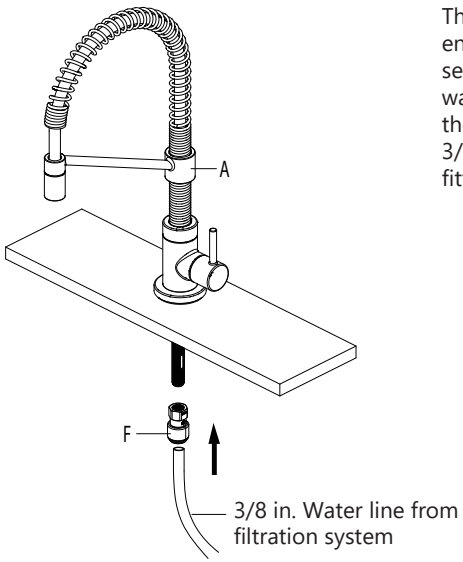

Thread the quick connect adaptor (F) onto the end of the faucet assembly (A) stud, and tighten securely using a wrench. Connect the 3/8 in. water line from the filtration system by pushing the line into the connector (F). Pull down on the 3/8 in. line slightly to ensure the quick connect fitting has engaged.

Replacement Parts

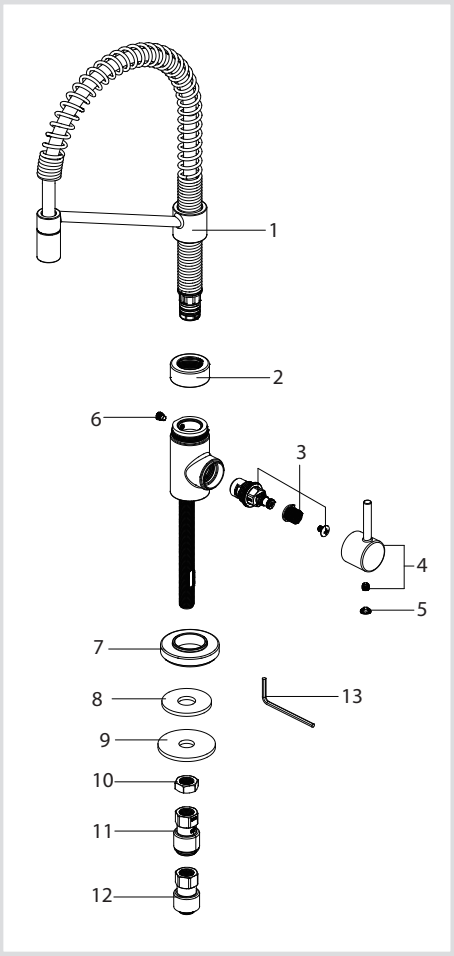

Replacement Parts List	Finish / Color	Part #
1. Spout Assembly	CH, SFS, MB, BG, BB, SFACB, SFSB*	KP27392
2. Spout Nut	CH, SFS, MB, BG, BB, SFACB, SFSB*	KP27393
3. Cartridge		KP27172
4. Handle	CH, SFS, MB, BG, BB, SFACB, SFSB*	KP27173
5. Index	GR, BL*	KP27194
6. Screw in Body		KP27394
7. Flange	CH, SFS, MB, BG, BB, SFACB, SFSB*	KP27174
8. Rubber Washer		KP27175
9. Metal Washer		KP27176
10. Mounting Nut		KP27177
11. 3/8 in. Connector		KP27178
12. 1/4 in. Connector		KP27266
13. Hex Wrench		KP27020

*Denotes faucet component color options:
CH - Chrome
SFS - Spot Free Stainless Steel
MB - Matte Black
BG - Brushed Gold
BB - Brushed Brass
SFACB - Spot Free Antique Champagne Bronze
SFSB - Spot Free Black Stainless
SFSMB - Spot Free Stainless Steel/Matte Black
BBMB - Brushed Brass/Matte Black
GR - Grey
BL - Black

Troubleshooting

If you have followed the instructions carefully and your faucet still does not work properly, take the following corrective steps:

PROBLEM	CAUSE	ACTION
Leakage under the handle	Cartridge (3) has come loose	Remove index (5) and loosen set screw with hex wrench (13). Remove the handle. Tighten cartridge (3) with a adjustable wrench.
Water will not shut off completely.	Cartridge may need to be adjusted or replaced.	Remove index (5) and loosen set screw with hex wrench (13). Remove the handle . Loosen the cartridge (3) with a adjustable wrench. Remove the cartridge (3). Check for cracks.

Codes/Standards Applicable:

NSF/ANSI 372 NSF/ANSI/CAN 61: Q ≤ 1 LEAD FREE

NSF/ANSI 61

ASME A112.18.1
1GPM 3.8L/min maximum

Faucet - Lifetime Limited Warranty

Kraus USA Plumbing, LLC ("Kraus") extends this warranty to the original purchaser for personal household use of the Faucet when purchased from an authorized Kraus dealer and in the location of original installation. This warranty is non-transferable.

Kraus warrants the structure and finish of the Faucet to be free from defects in material and workmanship under normal usage for as long as the original purchaser resides in the residence in which the Faucet was first installed.

Kraus warrants the Faucet's sprayhead assembly (including the engine, aerators, structure, restrictors, back flow preventers, sprayer hoses, braided supply line hoses which encompasses nylon, silicon and stainless steel) of the product to be free from defects in material and workmanship under normal usage for a period of one (1) year from the date of purchase.

Kraus warrants the Faucet's cartridge to be free from defects in material and workmanship under normal usage for a period of five (5) years from the date of purchase.

Any product reported to the authorized dealer or to Kraus as being defective within the warranty period will be repaired or replaced with a product of equal value at the option of Kraus.

Commercial Warranty

Kraus USA Plumbing, LLC ("Kraus") warrants its Products for a period of one (1) year to commercial purchasers of Products used in industrial, commercial and business applications.

Care and Cleaning Instructions

Certain cleaning products may cause damage to a Product's finish and use of the following on the Product will void this warranty:

- Abrasive cleaners such as powders, bleach, ammonia, alcohol or chorine
- Abrasive pads, steel wool or wire brushes

What is Not Covered

This warranty does not cover Products that were discontinued when purchased or display Products, whether such Products were purchased at discount outlets, unauthorized dealers, and/or sold on clearance. This warranty does not cover any free gifts included with purchase.

This warranty does not cover damage resulting from neglect, misuse (including use for an unintended application), abuse, carelessness, accident, hard water or mineral deposits, exposure to corrosive materials, improper maintenance, alteration of the Product, or failure to follow care, cleaning or installation instructions enclosed with your Product. Kraus recommends that all Kraus Products be installed by a fully licensed and insured trade professional with experience in the installation of bathroom and/or kitchen manufactured goods.

How to Make a Warranty Claim

If you are a **consumer purchaser**, please contact a Kraus® Customer Service Representative at:
Kraus USA Plumbing, LLC
12 Harbor Park Drive
Port Washington, NY 11050
Toll-free 800-775-0703
Customerservice@kraususa.com

If you are a **plumbing contractor or trade professional**, please contact a Kraus Pro Representative at:
Kraus USA Plumbing, LLC
12 Harbor Park Drive
Port Washington, NY 11050
516-801-8955
Proservice@kraususa.com

If you are an **authorized partner**, please contact a Partner Support Representative at:
Kraus USA Plumbing, LLC
12 Harbor Park Drive
Port Washington, NY 11050
516-801-8954
Partnersupport@kraususa.com

In requesting warranty service, please be ready to provide your proof of purchase and a description of the problem. Shipping charges will be covered for the first (1) year of the warranted replacement part or product (HI, AK, and Puerto Rico shipping charges may apply). International shipping fees are not included.

Limitation on Duration of Implied Warranties

Please note that some states/provinces (including Quebec) do not allow limitations on how long an implied warranty lasts, so the below limitations may not apply to you. TO THE MAXIMUM EXTENT PERMITTED BY APPLICABLE LAW, ANY IMPLIED WARRANTY, INCLUDING THE IMPLIED WARRANTIES OF MERCHANTABILITY AND OF FITNESS FOR A PARTICULAR PURPOSE, IS LIMITED TO THE STATUTORY PERIOD OR THE DURATION OF THIS WARRANTY, WHICHEVER IS SHORTER.

Limitation of Special, Incidental or Consequential Damages

Please note that some states/provinces (including Quebec) do not allow the exclusion or limitation of special, incidental or consequential damages, so the below limitations and exclusions may not apply to you. TO THE MAXIMUM EXTENT PERMITTED BY APPLICABLE LAW, THIS WARRANTY DOES NOT COVER, AND KRAUS USA PLUMBING, LLC SHALL NOT BE LIABLE FOR, ANY SPECIAL, INCIDENTAL OR CONSEQUENTIAL DAMAGES (INCLUDING LABOR CHARGES TO REPAIR, REPLACE, INSTALL OR REMOVE THIS PRODUCT), WHETHER ARISING OUT OF BREACH OF ANY EXPRESS OR IMPLIED WARRANTY, BREACH OF CONTRACT, TORT, OR OTHERWISE.

This warranty gives you specific legal rights, and you may also have other rights which vary from state/province to state/province.

Download the Kraus Care & Maintenance Guide at:
http://www.kraususa.com/maintenance

IMPORTANT

Register Your Kraus Product

Activate Your Warranty

Access Premium Customer Support

Get Product Information

REGISTER TODAY

http://www.kraususa.com/registration

Kraus®

www.kraususa.com