THE Rubinet FAUCET COMPANY

ASSEMBLY INSTRUCTION 3DHXL-C

DECK MOUNT TUB FILLER WITH HAND HELD SHOWER



3DHXL



3DHXC

REMOVAL OF FIXTURE:
Always turn the water supply off before removing the existing fixture or disassembling a valve. Open both fixture handles to relieve water pressure and to ensure that the water has been successfully turned off.

CARE OF FIXTURE:
The use of warm water and a soft cloth is all that is required to clean Rubinet products. The patina of our living finishes (Oil Rubbed Bronze & Tuscan Brass) will change as a result of normal use. Applying Mineral Oil on occasion will create a softer look, subtle color changes and character.

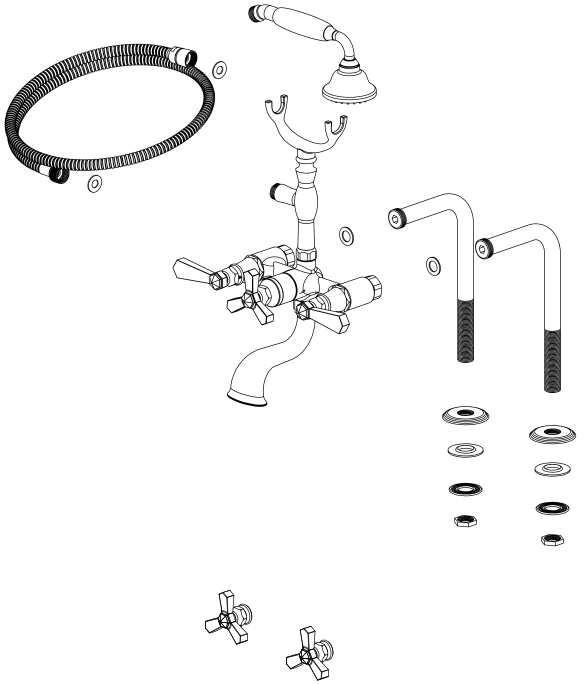

1

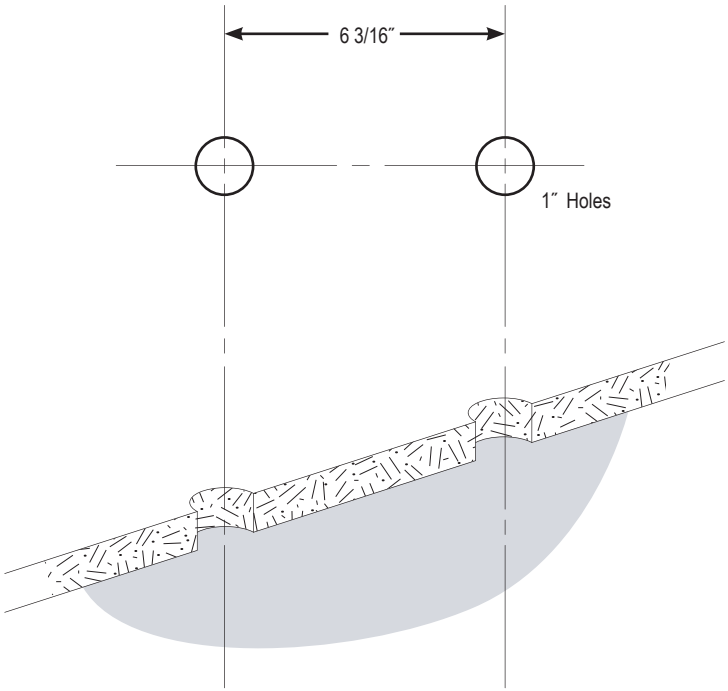

2

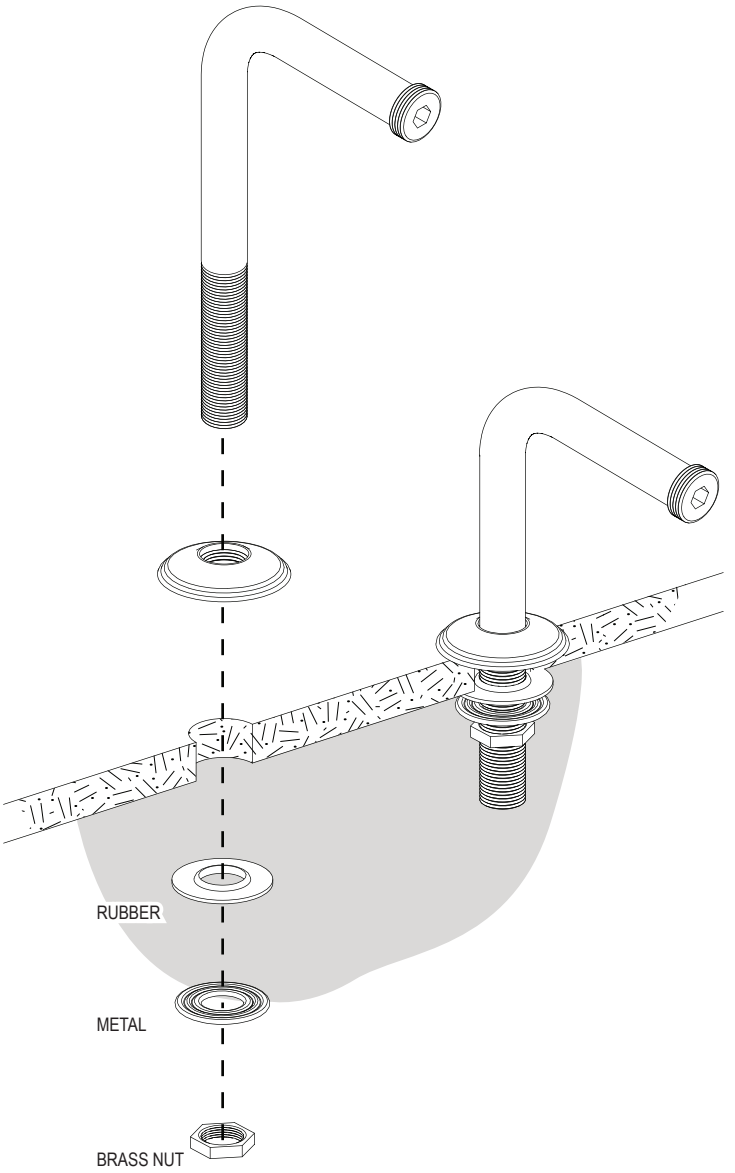

3

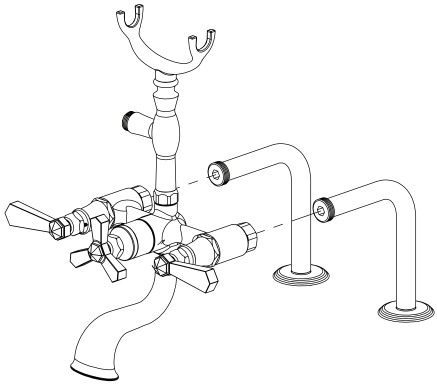

4

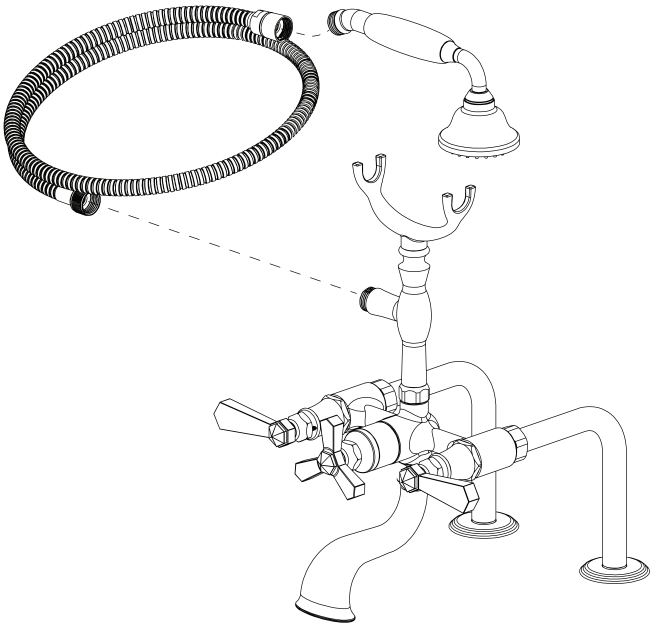

REMOVING DIVERTER CARTRIDGE

1. Remove the diverter handle. (center)

2. Remove the shaft using wrench.

3. Remove diverter cartridge.

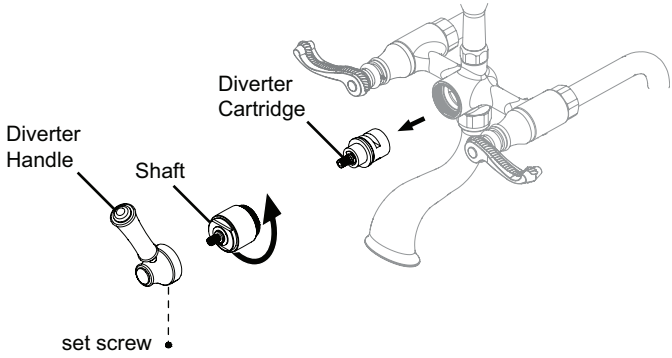

REPLACING DIVERTER CARTRIDGE
Align notch to the matching hole to ensure proper assembly

