THE Rubinet FAUCET COMPANY

ASSEMBLY INSTRUCTION 8D / 8PHOSL - R

WIDESPREAD KITCHEN SET WITH HAND SPRAY



8DHOSL



8DHOSR



8PHOSL



8PHOSR

REMOVAL OF FAUCET:
Always turn the water supply off before removing the existing faucet or disassembling a valve. Open both faucet handles to relieve water pressure and to ensure that the water has been successfully turned off.

CARE OF FAUCET:
The use of warm water and a soft cloth is all that is required to clean Rubinet products. The patina of our living finishes (Oil Rubbed Bronze & Tuscan Brass) will change as a result of normal use. Applying Mineral Oil on occasion will create a softer look, subtle color changes and character.

CONTACT US:
If you need assistance with installation, replacement parts or have any questions regarding your Rubinet product, please call a Customer Service representative at: 905-851-6781 toll free 1-800-461-5901 or visit **www.rubinet.com**

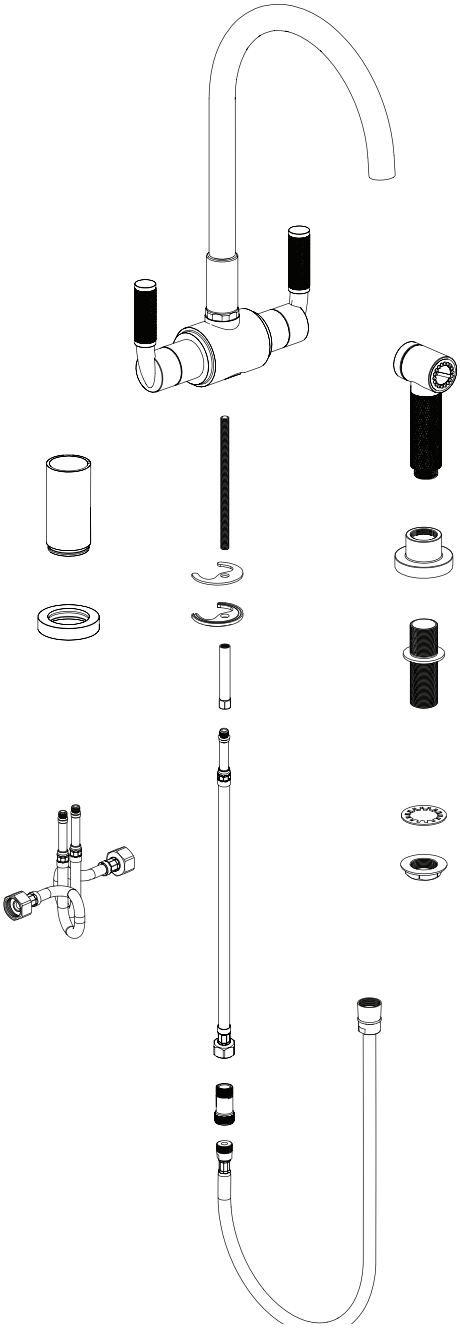

1

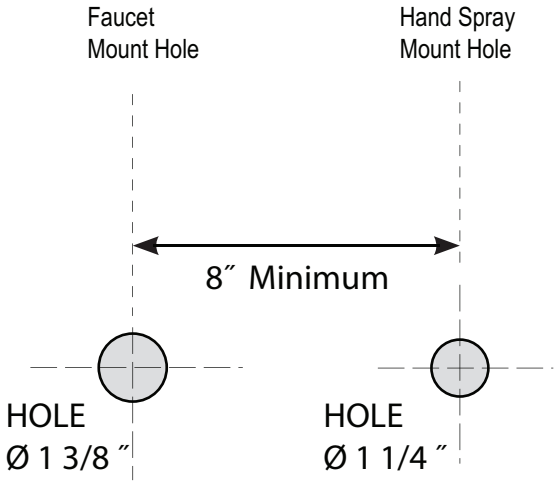
Faucet
Mount Hole
Hand Spray
Mount Hole
8″ Minimum
HOLE
Ø 1 3/8 ″
HOLE
Ø 1 1/4 ″

2

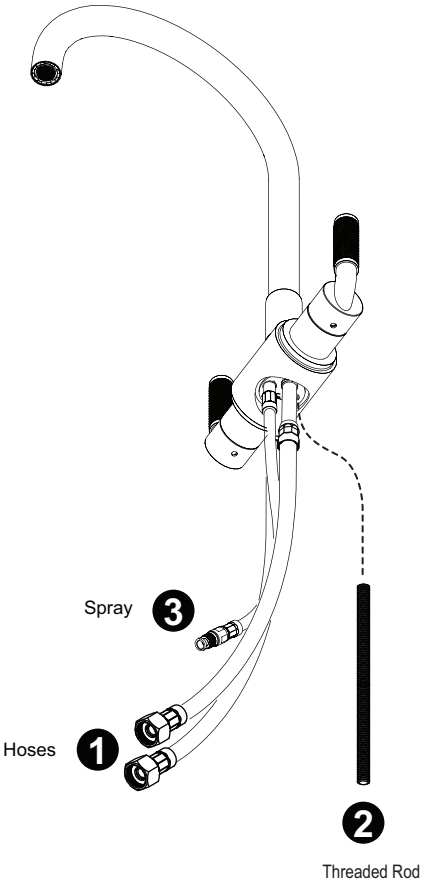
Spray
3
Hoses
1
2
Threaded Rod

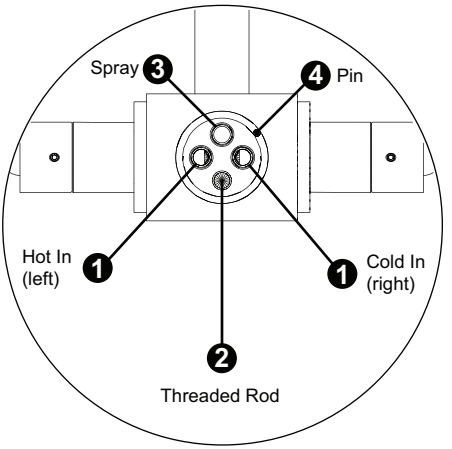
Spray
3
4
Pin
Hot In
(left)
1
1
Cold In
(right)
2
Threaded Rod

3

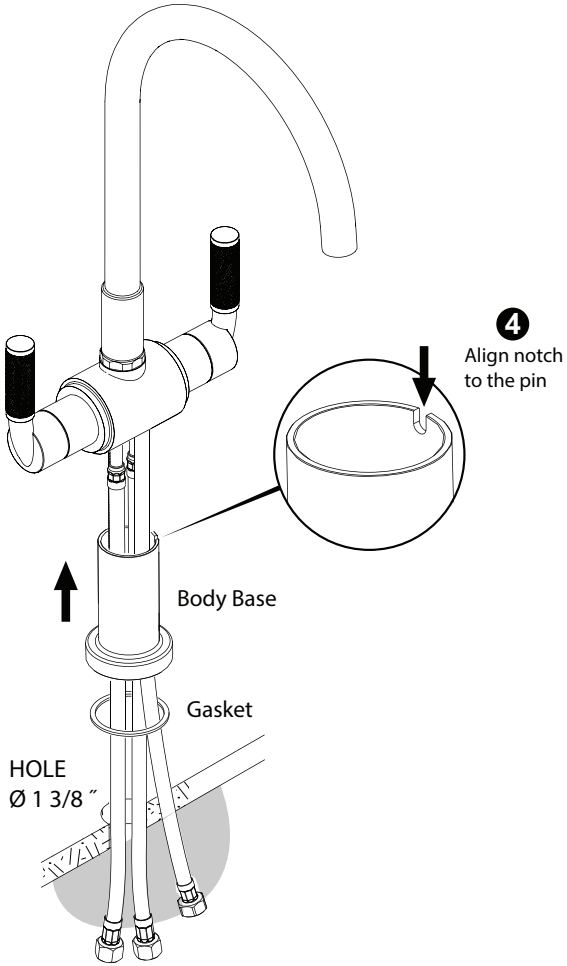

4

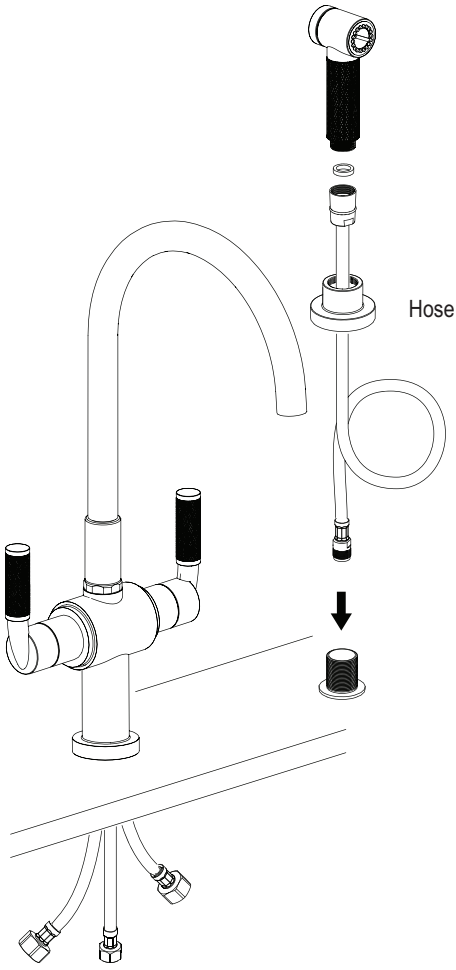

5

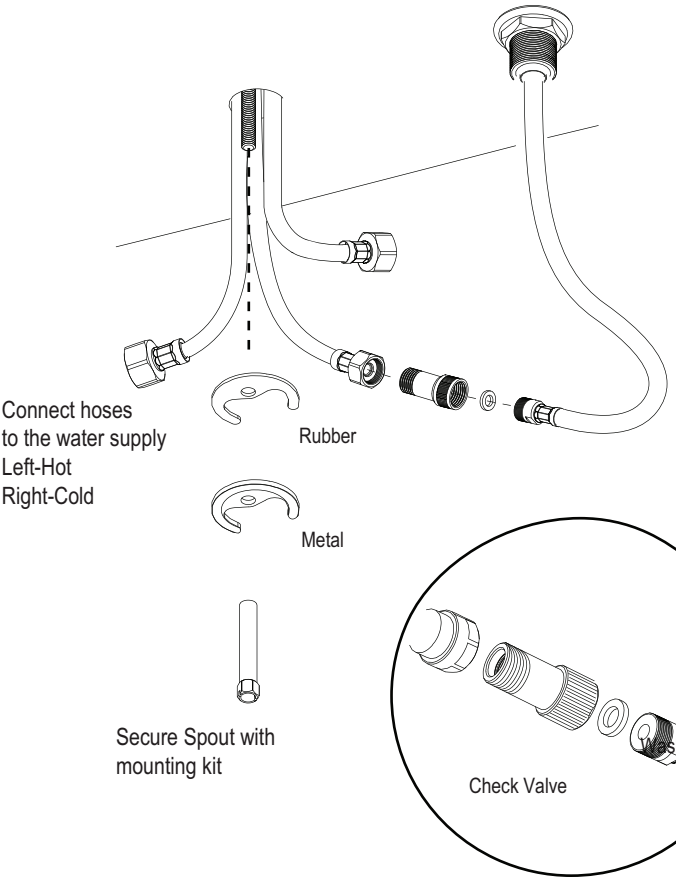
Connect hoses
to the water supply
Left-Hot
Right-Cold
Rubber
Metal
Secure Spout with
mounting kit
Washers
Check Valve