161114

THE **Rubinet** FAUCET COMPANY

ASSEMBLY INSTRUCTION 3AHXL or C

TWO VALVE TUB FILLER

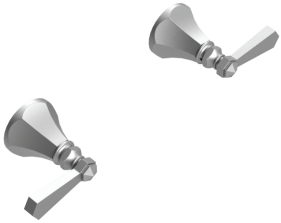

3AHXL

3AHXC

REMOVAL OF FIXTURE:
Always turn the water supply off before removing the existing fixture or disassembling a valve. Open both fixture handles to relieve water pressure and to ensure that the water has been successfully turned off.

CARE OF FIXTURE:
The use of warm water and a soft cloth is all that is required to clean Rubinet products. The patina of our living finishes (Oil Rubbed Bronze & Tuscan Brass) will change as a result of normal use. Applying Mineral Oil on occasion will create a softer look, subtle color changes and character.

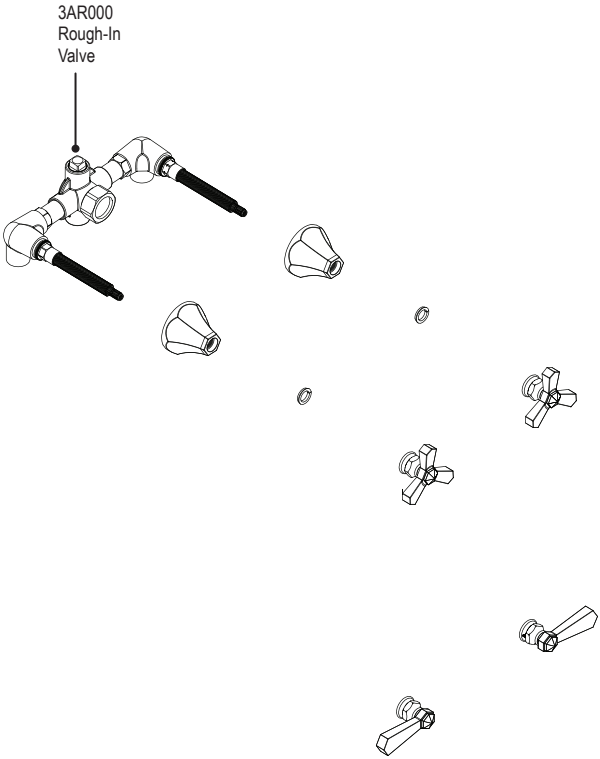
3AR000
Rough-In
Valve

1

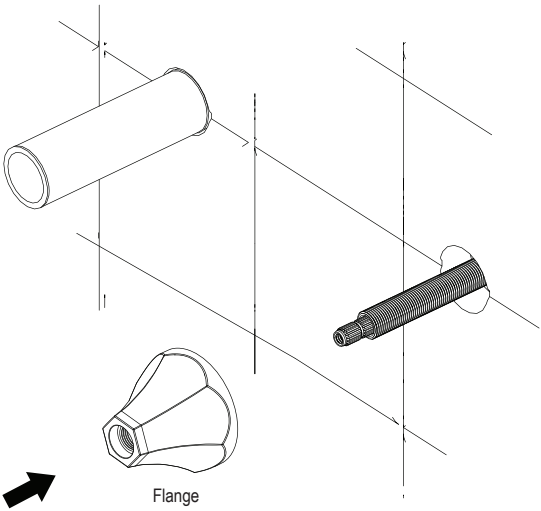

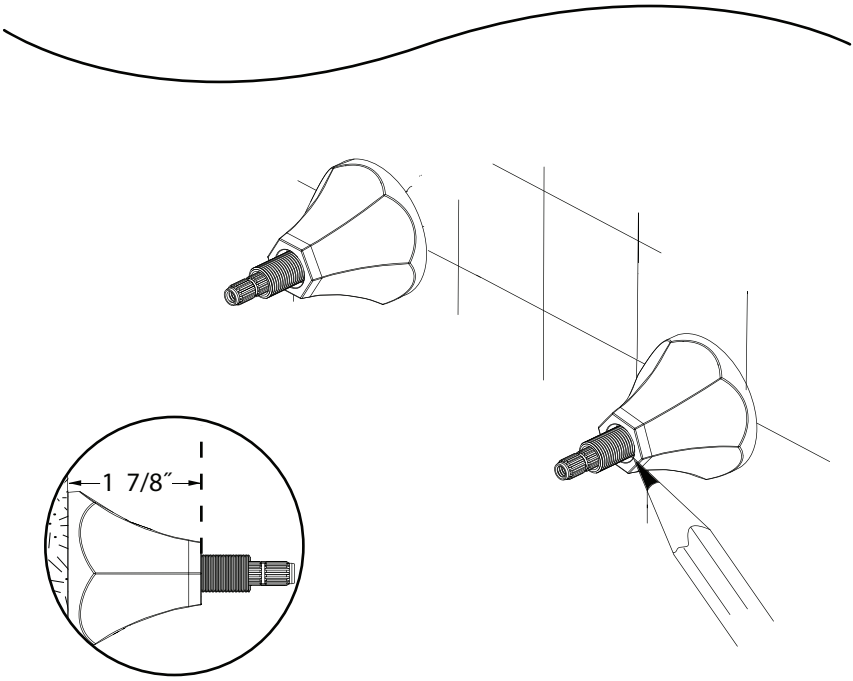

MUST CUT FLUSH
TO THE FLANGE TRIM
* 1 7/8″ (47.5mm)
from the finished wall

2

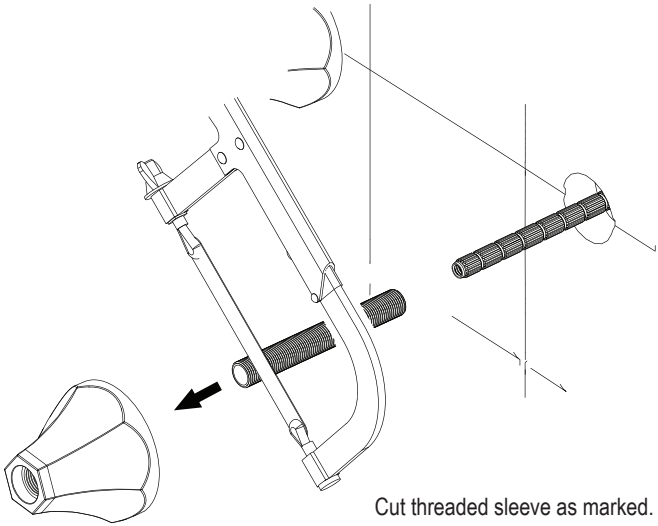

Cut threaded sleeve as marked.

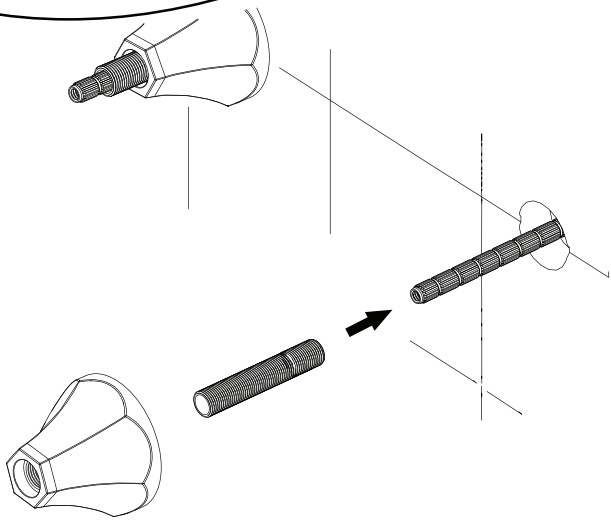

3

IF THE HANDLE DOES NOT FIT

Place handle on the spline.

2 3/4″

CUT THE SPLINE TO FIT
* 2 3/4″ (70mm)
from the finished wall

Turn each cartridge
splines into **OFF** position
before installing handles

Flange
Bushing

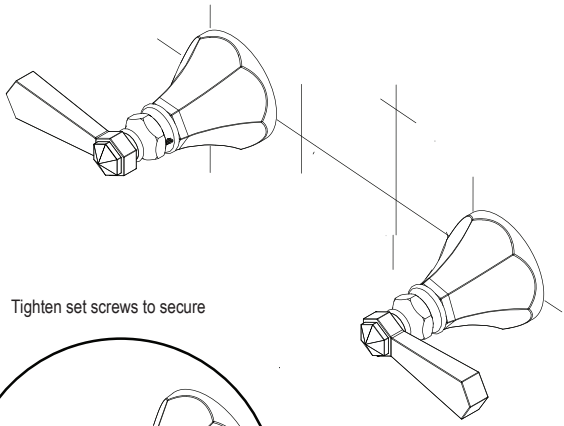

Tighten set screws to secure

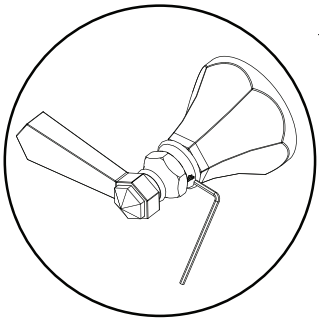

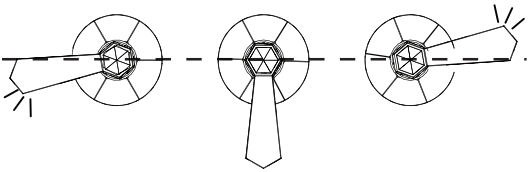

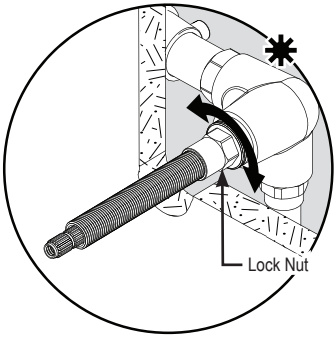

IF THE HANDLES DO NOT ALIGN CORRECTLY
You can adjust them. Please refer to the
'Handle Alignment' instruction at the back.

HANDLE ALIGNMENT (3A)

1

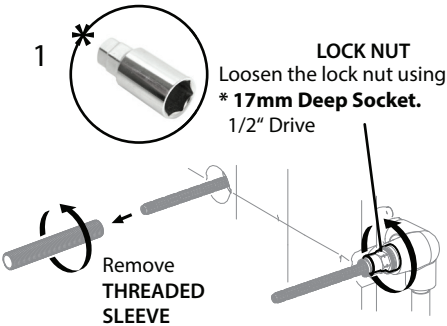

2

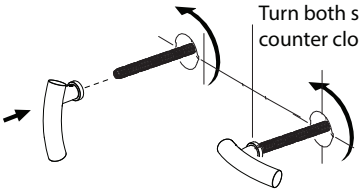

3

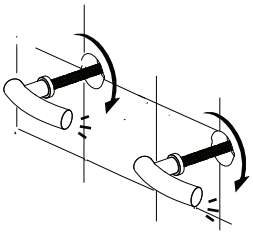

Once cartridge valves are loose, screw them back into the faucet using the handle.
Stop when you feel a noticeable resistance.
Then remove handles.

4

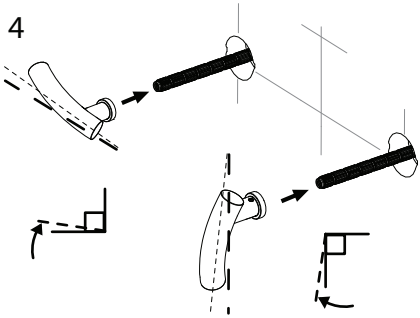

Replace Left Handle (hot) **one tooth off** from the **OFF** position as shown.

And Right Handle (cold) **one tooth off** from the **ON** position as shown.

5

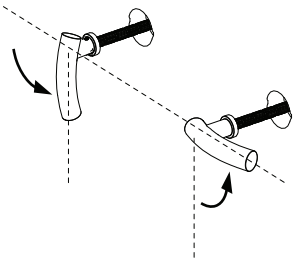

Turn the handles to the desired alignment.
(This will unscrew the cartridge)
This adjustment should not be more than 25°.

6

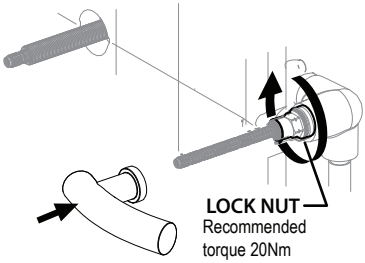

Tighten Lock Nut using **17mm Deep Socket** wrench to secure cartridge valve position.

*Use handle to hold spline while tightening.

FEATURES:
- Brass construction with choice of 21 finishes
- Two handles
- Quarter-turn ceramic disk cartridges
- Flow Rate : 8.0 gpm @ 50 psi

APPROVAL:
- AB1953 / NSF61
- ASME A 112.18.1
- CSA B125.1

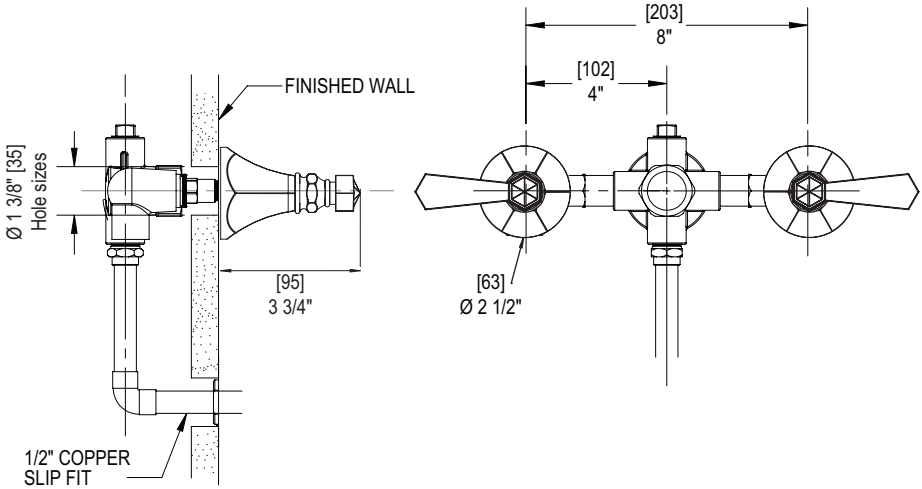

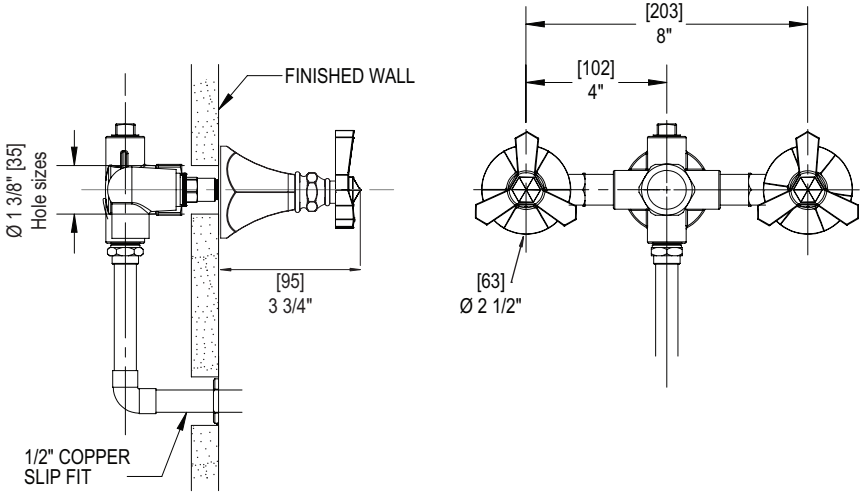

CONTACT US:
If you need assistance with installation, replacement parts or have any questions regarding your Rubinet product, please call a Customer Service representative at: 905-851-6781 toll free 1-800-461-5901 or visit **www.rubinet.com**