FEATURES:
- Brass construction with choice of 21 finishes
- Two Handles, Spout
- Quarter-turn ceramic disk cartridges, 3/4" Valves
- Flexible Stainless Steel supply hoses for easy installation
- Flow rate: 12 gpm @ 40 psi / 15 gpm @ 60 psi

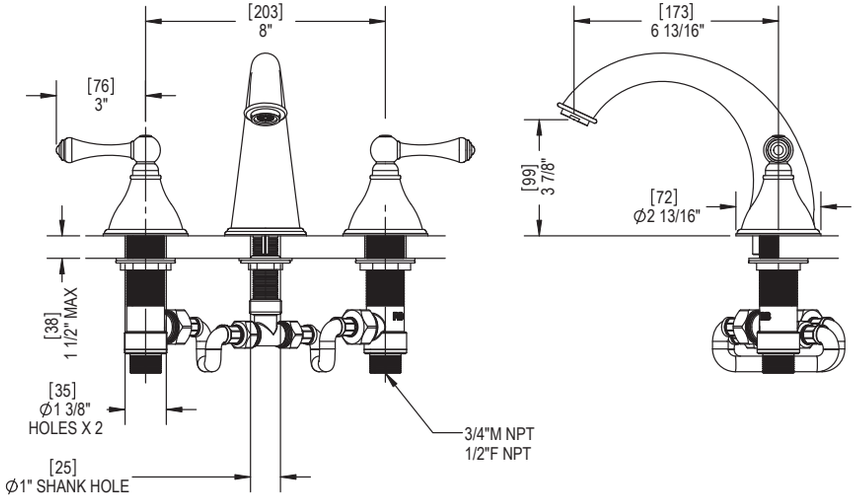

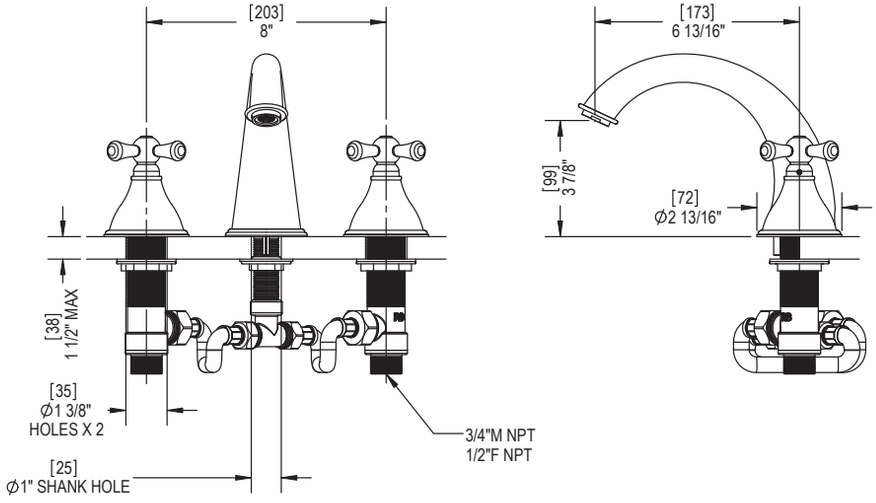

CONTACT US:
If you need assistance with installation, replacement parts or have any questions regarding your Rubinet product, please call a Customer Service representative at: 905-851-6781 toll free 1-800-461-5901 or visit **www.rubinet.com**

151228

THE **Rubinet** FAUCET COMPANY

ASSEMBLY INSTRUCTION — 5A-5EFJL or C

ROMAN TUB FILLER



5AFJL (3/4″ Valve)
5EFJL (1/2″ Valve)



5AFJC (3/4″ Valve)
5EFJC (1/2″ Valve)

REMOVAL OF FAUCET:
Always turn the water supply off before removing the existing faucet or disassembling a valve. Open both faucet handles to relieve water pressure and to ensure that the water has been successfully turned off.

CARE OF FAUCET:
The use of warm water and a soft cloth is all that is required to clean Rubinet products. The patina of our living finishes (Oil Rubbed Bronze & Tuscan Brass) will change as a result of normal use. Applying Mineral Oil on occasion will create a softer look, subtle color changes and character.

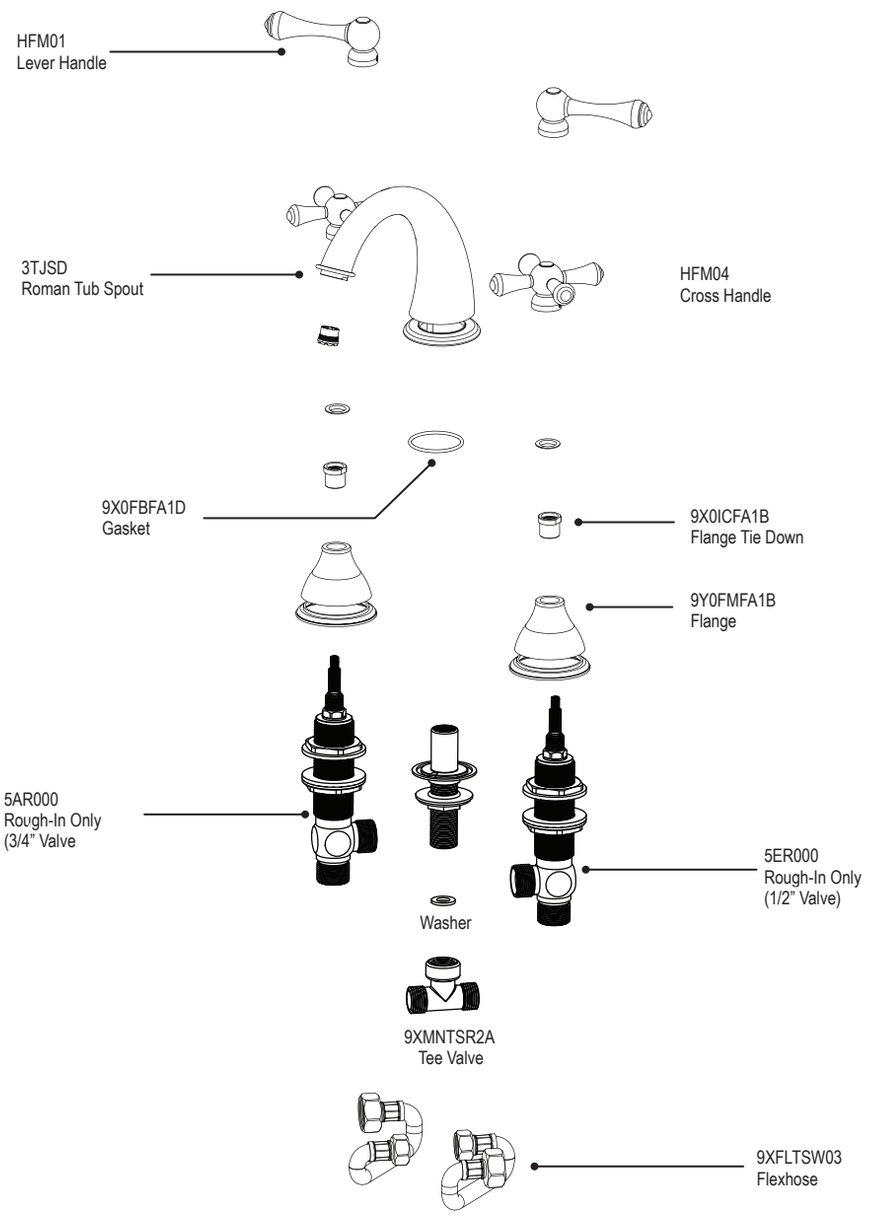

ROMAN TUB FILLER 5A-5EFJL or C

5

AERATOR REMOVAL

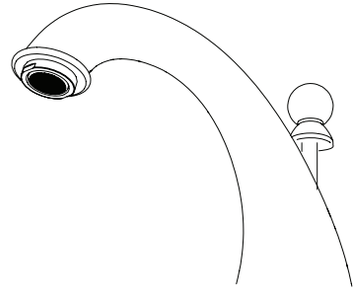

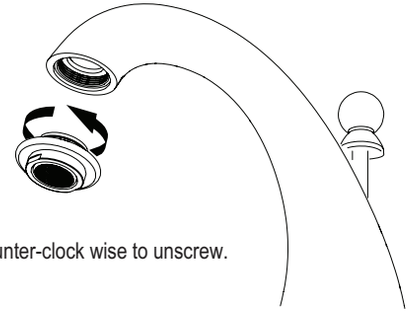

Turn counter-clock wise to unscrew.

4

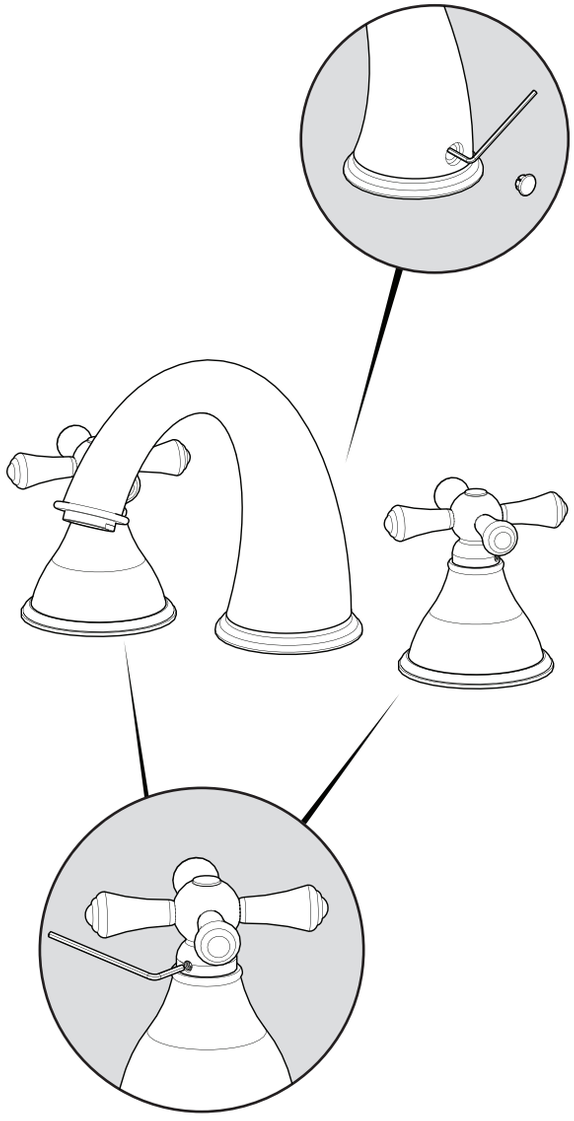

1

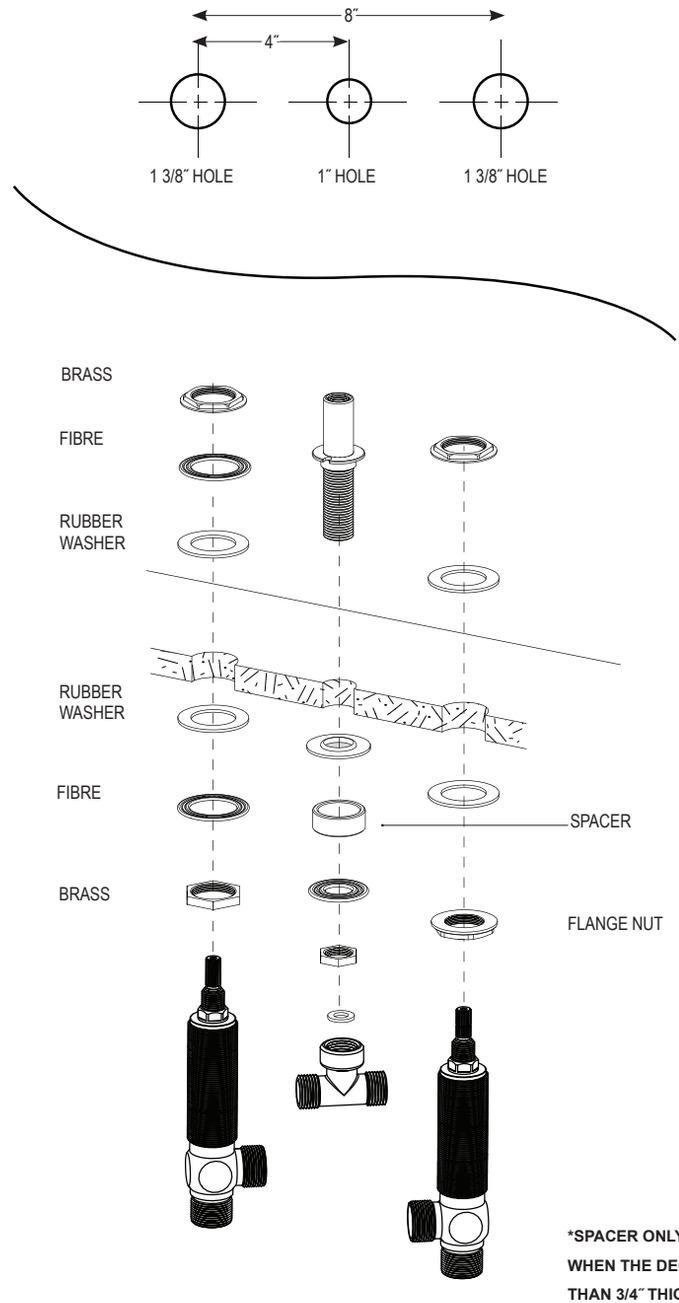

***SPACER ONLY REQUIRED WHEN THE DECK IS LESS THAN 3/4″ THICK**

2

* Adjust the top side Brass Nut so that the correct sidebody height is achieved using the JIG as shown

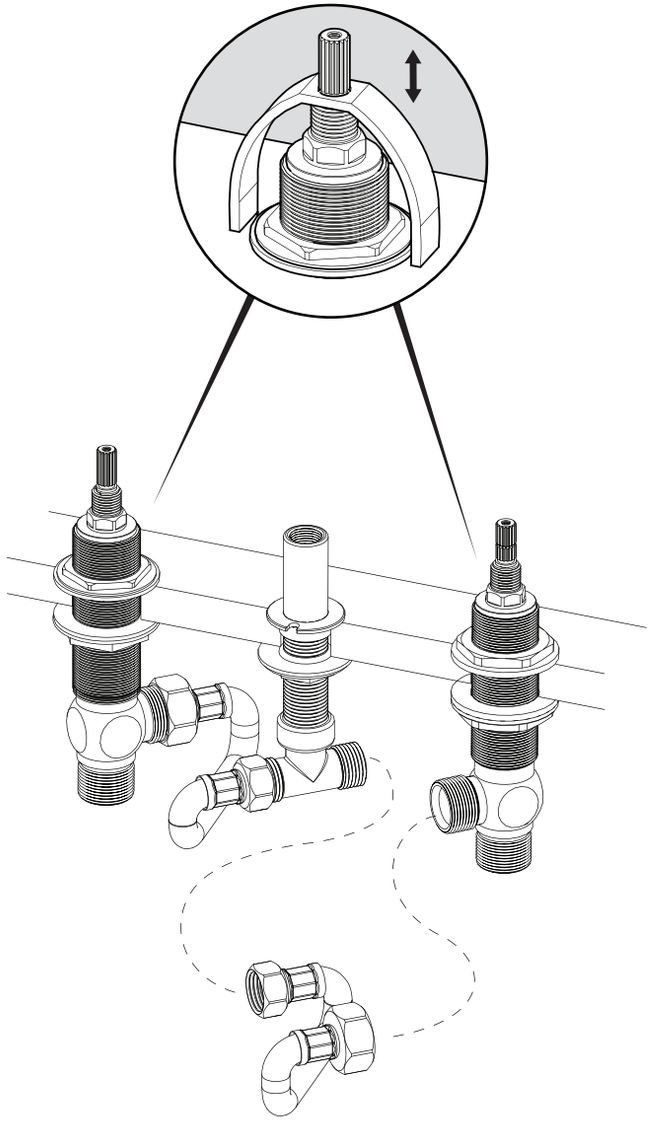

ROMAN TUB FILLER 5A-5EFJL or C

3

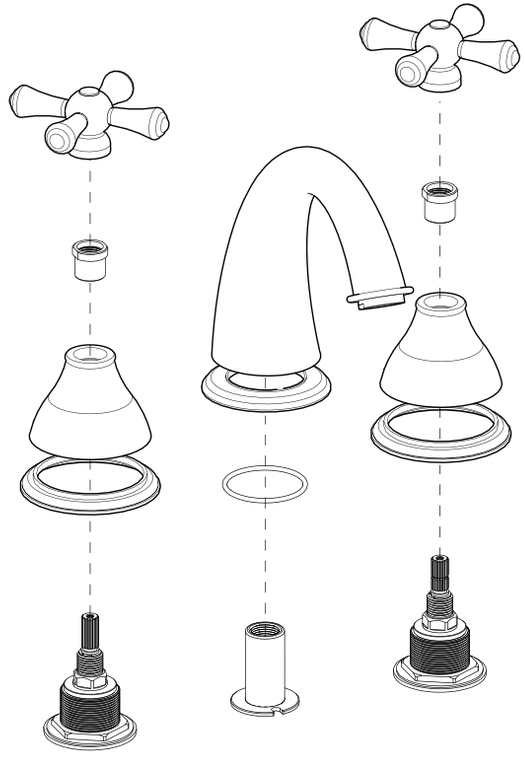

*Turn the cartridge valves to closed position before installing handles