FEATURES:
- Brass construction with choice of 21 finishes
- Quarter Turn adjustable, ceramic disc cartridges
- Two Lever or Cross handles
- Hand Held Shower with 60˝ Hose (2.5 gpm @ 60 psi)
- Tub Spout (7.0 gmp @ 60 psi)
- Built-in double check valve

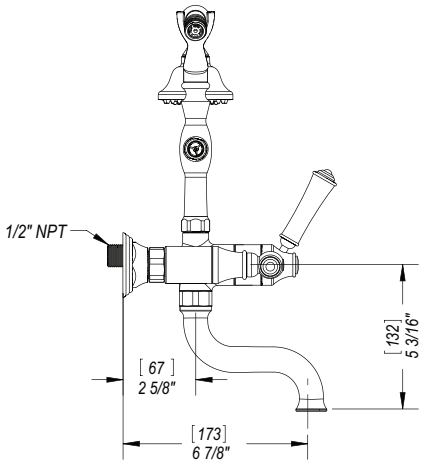

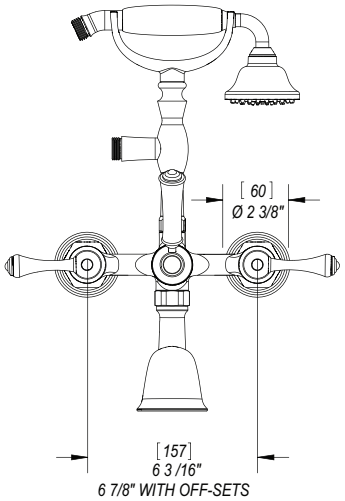

CONTACT US:
If you need assistance with installation, replacement parts or have any questions regarding your Rubinet product, please call a Customer Service representative at: 905-851-6781 toll free 1-800-461-5901 or visit **www.rubinet.com**

150623

THE **Rubinet** FAUCET COMPANY

ASSEMBLY INSTRUCTION — 3WFML or C

WALL MOUNT TUB FILLER WITH HAND HELD SHOWER

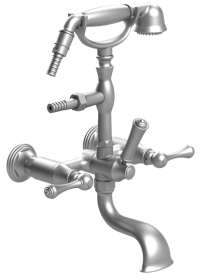

3WFML

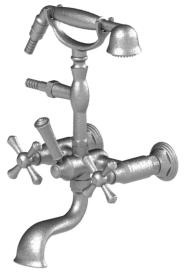

3WFMC

REMOVAL OF FIXTURE:
Always turn the water supply off before removing the existing fixture or disassembling a valve. Open both fixture handles to relieve water pressure and to ensure that the water has been successfully turned off.

CARE OF FIXTURE:
The use of warm water and a soft cloth is all that is required to clean Rubinet products. The patina of our living finishes (Oil Rubbed Bronze & Tuscan Brass) will change as a result of normal use. Applying Mineral Oil on occasion will create a softer look, subtle color changes and character.

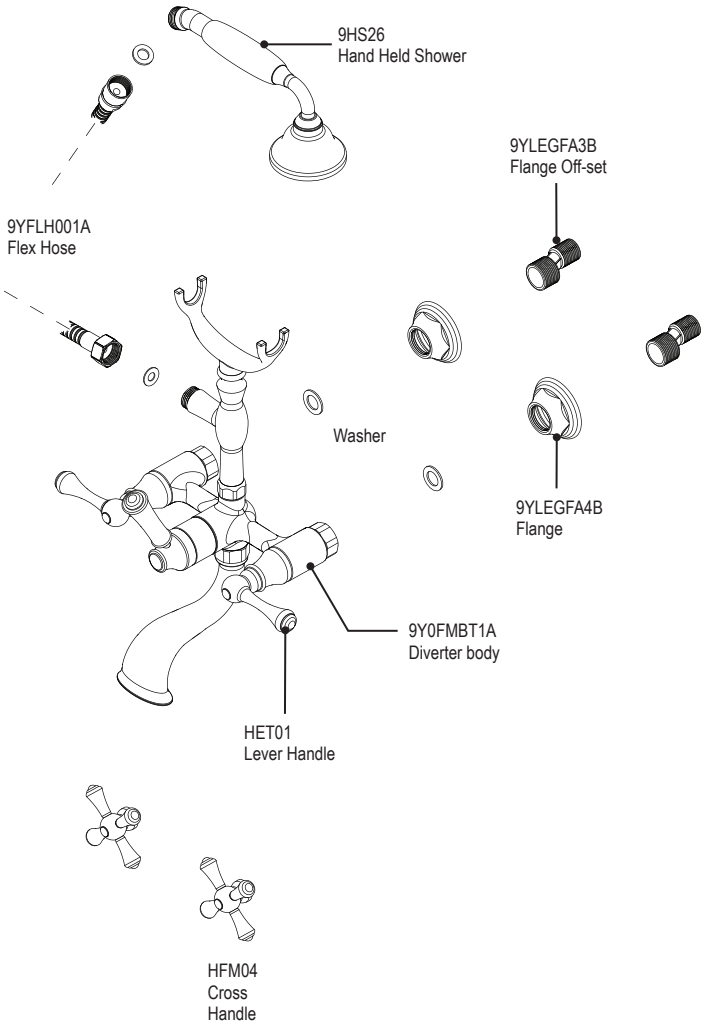

WALL MOUNT TUB FILLER WITH HAND HELD SHOWER 3WFML or C

5

REMOVING DIVERTER CARTRIDGE

1. Remove the diverter handle. (center)

2. Remove the shaft using wrench.

3. Remove diverter cartridge.

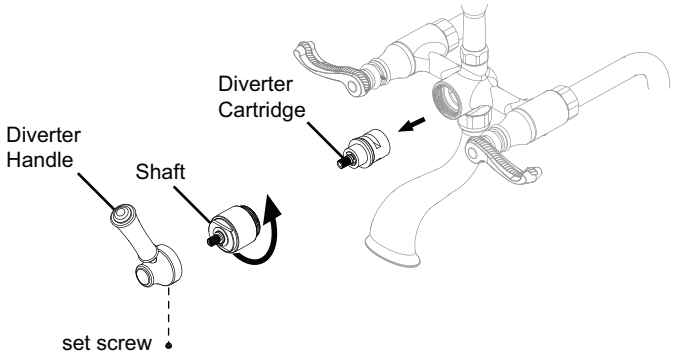

REPLACING DIVERTER CARTRIDGE
Align notch to the matching hole to ensure proper assembly

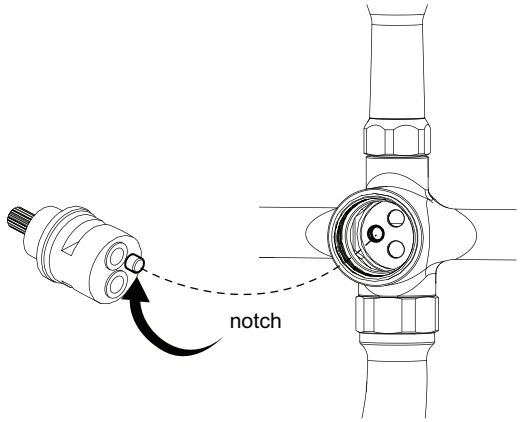

4

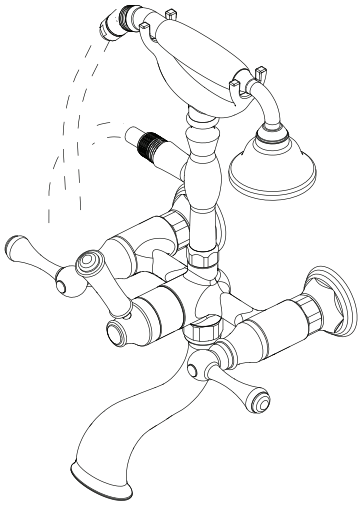

1

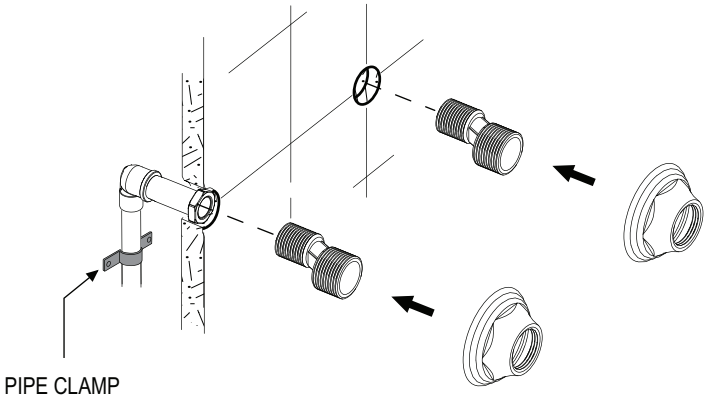
PIPE CLAMP
RECOMMENDED
FOR ROUGH-IN

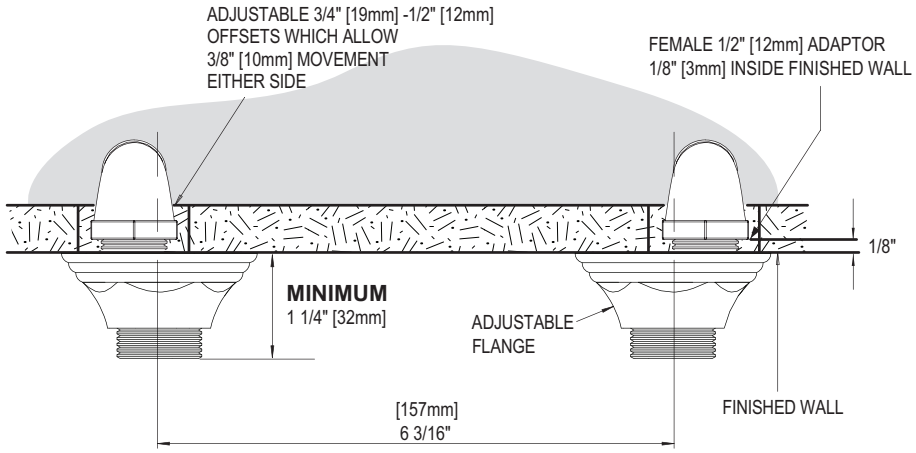
ADJUSTABLE 3/4" [19mm] -1/2" [12mm]
OFFSETS WHICH ALLOW
3/8" [10mm] MOVEMENT
EITHER SIDE
FEMALE 1/2" [12mm] ADAPTOR
1/8" [3mm] INSIDE FINISHED WALL
1/8"
MINIMUM
1 1/4" [32mm]
ADJUSTABLE
FLANGE
FINISHED WALL
[157mm]
6 3/16"

2

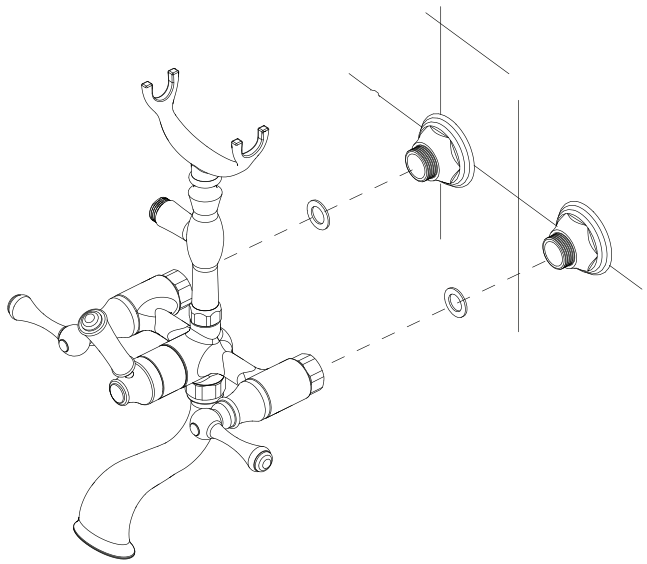

WALL MOUNT TUB FILLER WITH HAND HELD SHOWER 3WFML or C

3

