FEATURES:
- Brass construction with choice of 21 finishes
- Two Lever or Cross handles, diverter (lever or cross)
- Quarter turn Ceramic Disk cartridges
- Flow Rate
  Shower : 7.0 gpm @ 50 psi
  Tub : 7.0 gpm @ 50 psi

APPROVAL:
- AB1953 / NSF61
- ASME A 112.18.1
- CSA B125.1

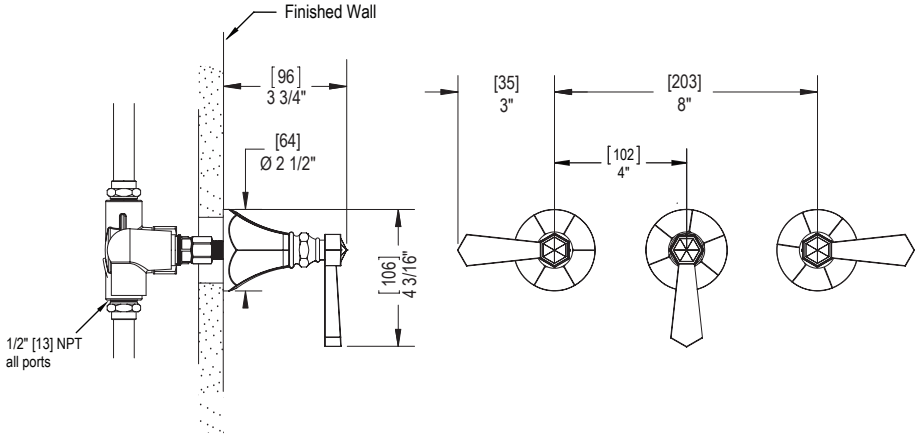

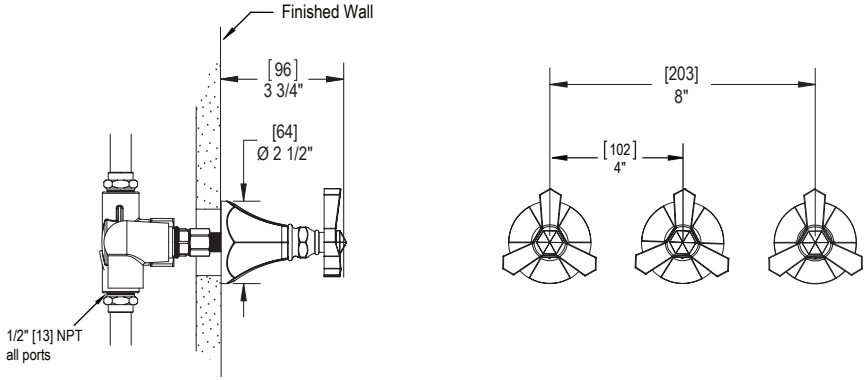

CONTACT US:
If you need assistance with installation, replacement parts or have any questions regarding your Rubinet product, please call a Customer Service representative at: 905-851-6781 toll free 1-800-461-5901 or visit **www.rubinet.com**

161102

THE **Rubinet** FAUCET COMPANY

ASSEMBLY INSTRUCTION 2AHXL or C

THREE VALVE TUB & SHOWER

2AHXL

2AHXC

REMOVAL OF FIXTURE:
Always turn the water supply off before removing the existing fixture or disassembling a valve. Open all fixture handles to relieve water pressure and to ensure that the water has been successfully turned off.

CARE OF FIXTURE:
The use of warm water and a soft cloth is all that is required to clean Rubinet products. The patina of our living finishes (Oil Rubbed Bronze & Tuscan Brass) will change as a result of normal use. Applying Mineral Oil on occasion will create a softer look, subtle color changes and character.

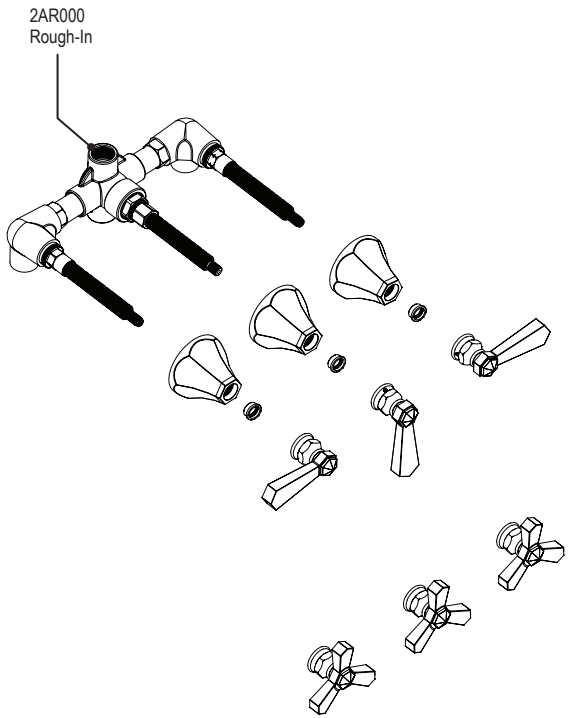

THREE VALVE TUB & SHOWER 2AHXL or C

5

HANDLE ALIGNMENT (2A)

1

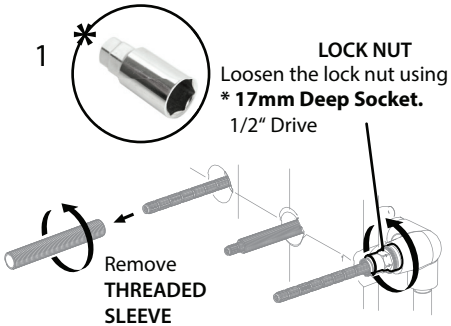

2

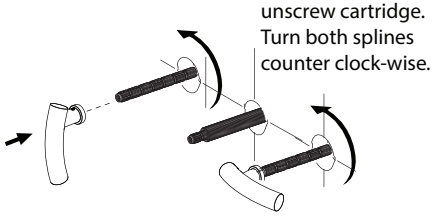

3

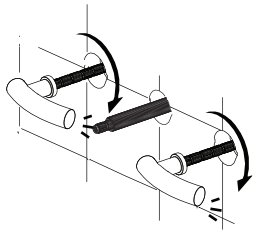

Once cartridge valves are loose, screw them back into the faucet using the handle. Stop when you feel a noticeable resistance. Then remove handles.

4

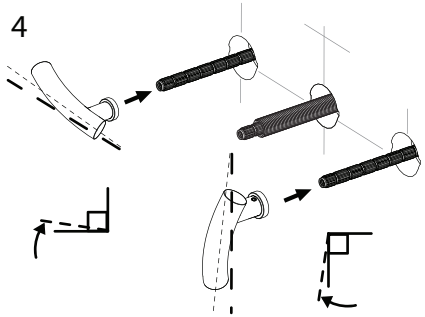

Replace Left Handle (hot) **one tooth off** from the **OFF** position as shown.

And Right Handle (cold) **one tooth off** from the **ON** position as shown.

5

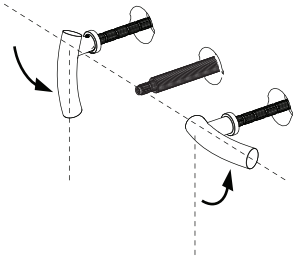

Turn the handles to the desired alignment. (This will unscrew the cartridge)
This adjustment should not be more than 25°.

6

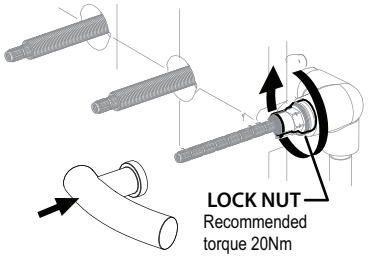

Tighten Lock Nut using **17mm Deep Socket** wrench to secure cartridge valve position.

*Use handle to hold spline while tightening.

4

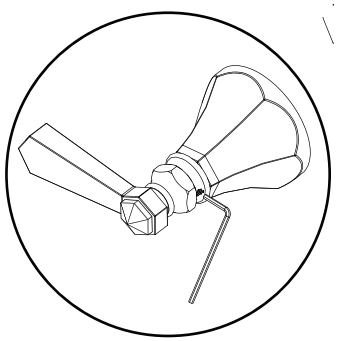

Tighten set screws to secure

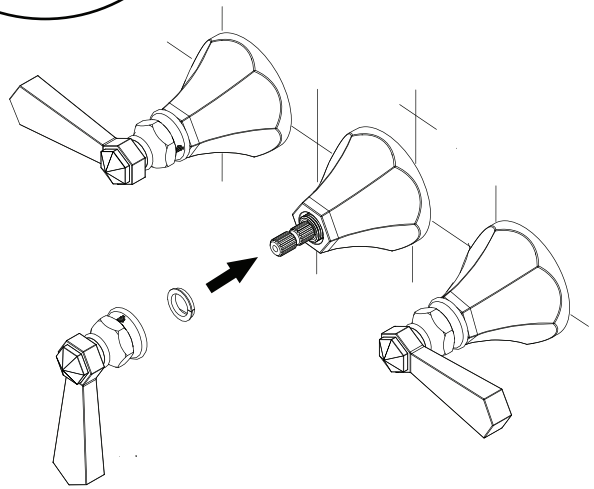

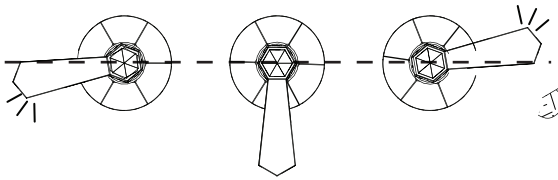

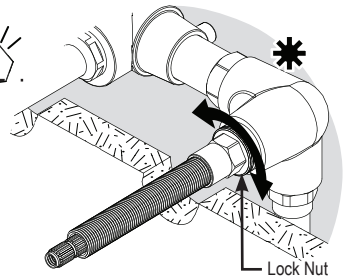

IF THE HANDLES DO NOT ALIGN CORRECTLY
You can adjust them. Please refer to the
'Handle Alignment' instruction at the back.

THREE VALVE TUB & SHOWER 2AHXL or C

1

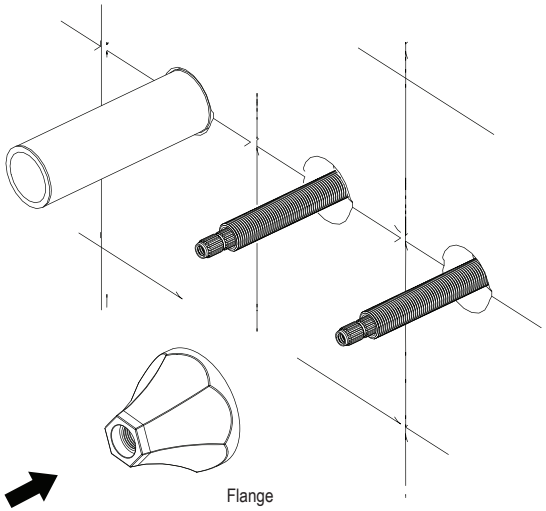

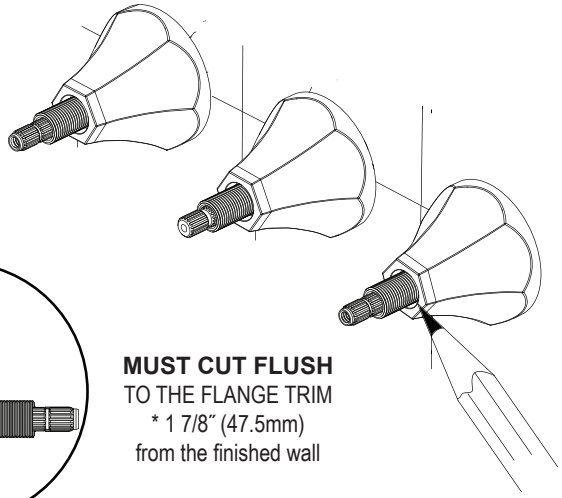

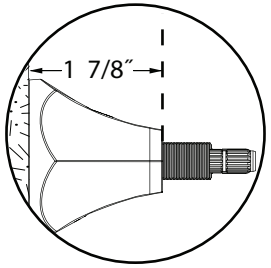

MUST CUT FLUSH
TO THE FLANGE TRIM
* 1 7/8″ (47.5mm)
from the finished wall

2

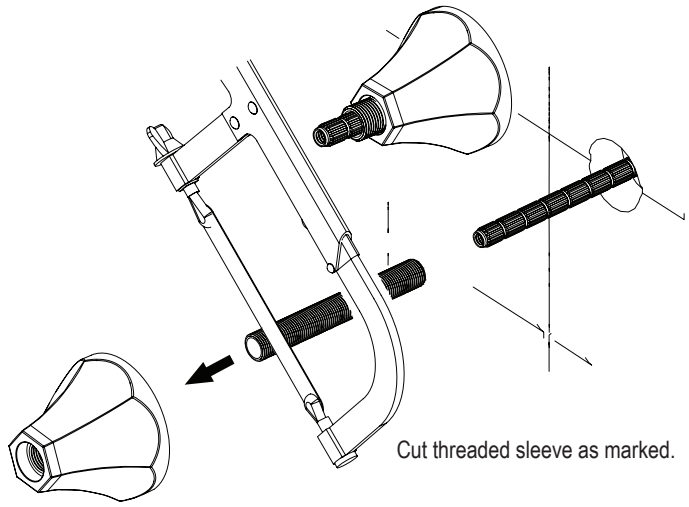

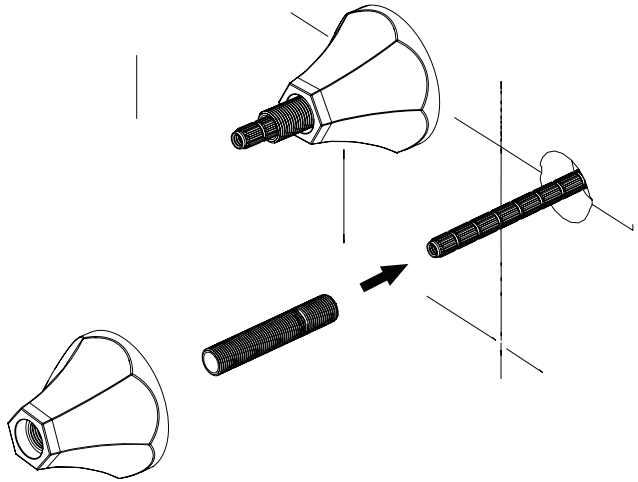

3
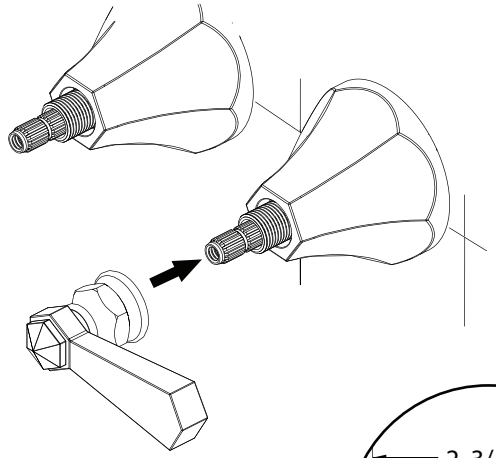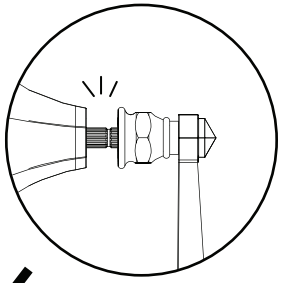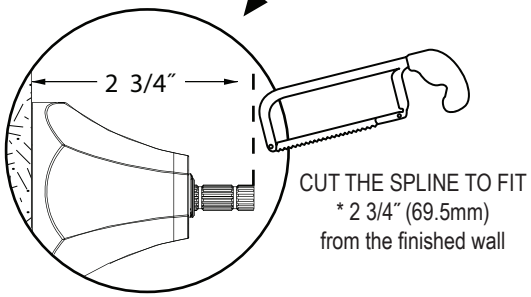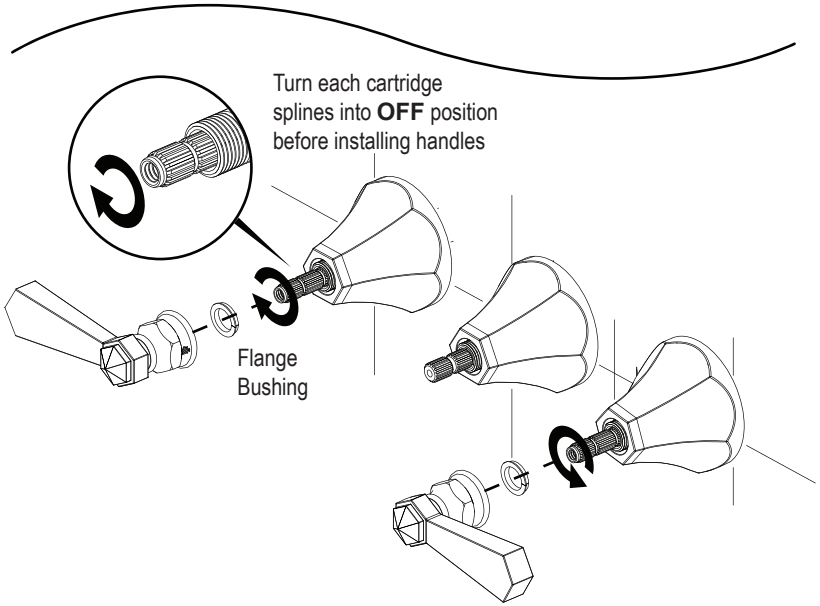
IF THE HANDLE DOES NOT FIT