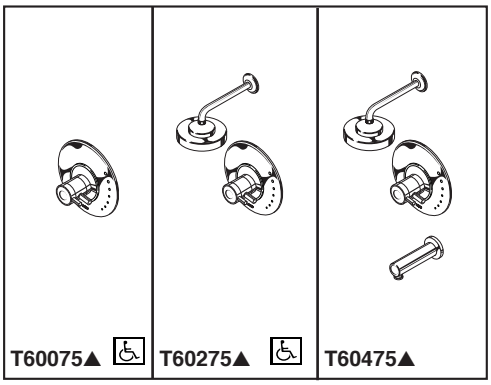


**Submitted Model No.:**_____

**Specific Features:**_____

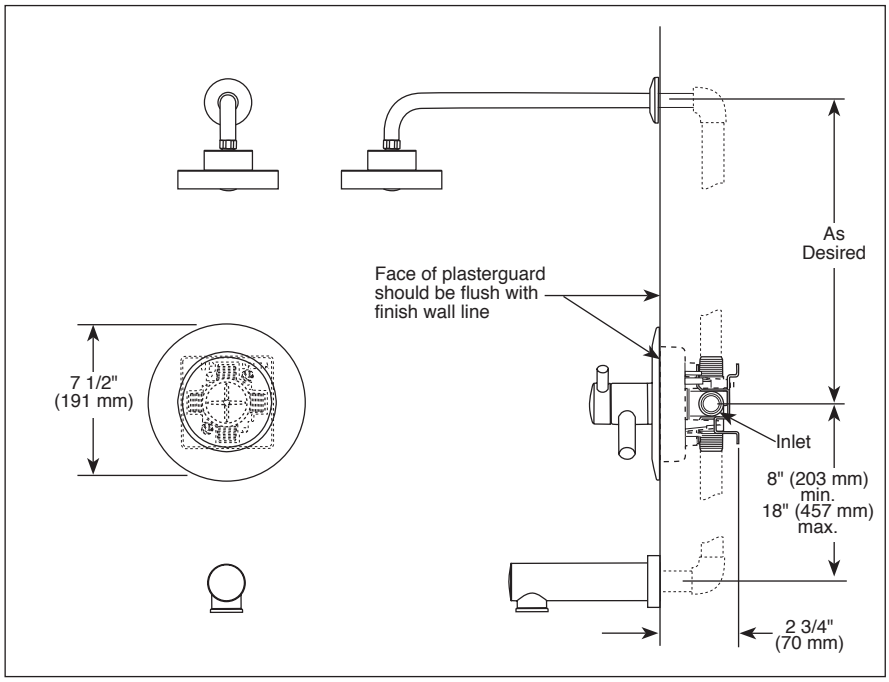


**87375▲** Showerhead

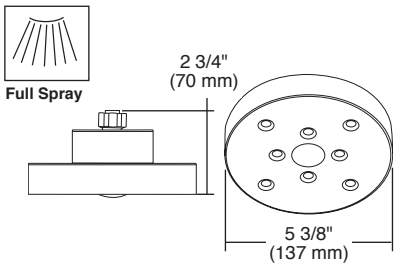


**RP71648▲** Shower Arm & Flange

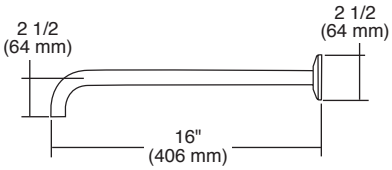


**RP74785** Available Extension Kit

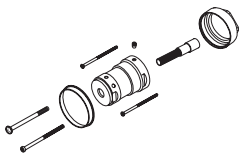

**RP54874▲** (Pull-Down Diverter Tub Spout)

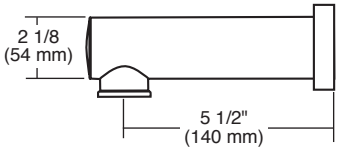


▲ Designate proper finish suffix

Delta reserves the right (1) to make changes in specifications and materials, and (2) to change or discontinue models, both without notice or obligation. Dimensions are for reference only. See current full-line price book or www.brizo.com for finish options and product availability.

BSP-B-T60075 Rev. F

BRIZO®

# TUB AND SHOWER FAUCET TRIM

- Odin™ Bath Collection
- TempAssure® Thermostatic
- Valve Only (T60075)
- Shower Only (T60275)
- Tub/Shower (T60475)

## STANDARD SPECIFICATIONS:

- TempAssure® 60 series thermostatic valve cartridge.
- Thermostatic wax element maintains the outlet temperature to ±3.6˚F.
- Must also order MultiChoice® Universal rough valve body (R60000 Series).
- Back-to-back installation capability.
- Lever volume control handle; temperature adjustment dial.
- Graphics indicate hot/cold temperature adjustment.
- Field adjustable to limit handle rotation into hot water zone.
- All parts replaceable from the front of the valve.
- Adjusts for up to 1" wall thickness.

## WARRANTY

- Lifetime limited warranty on parts (other than electronic parts and batteries) and finishes: or, for commercial users, for 5 years from date of purchase.
- 5 year limited warranty on electronic parts (other than batteries); or, for commercial users, for 1 year from the date of purchase. No warranty is provided on batteries.

## COMPLIES WITH:

- ASME A112.18.1 / CSA B125.1
- ASSE 1016
- Indicates compliance to ICC/ANSI A117.1- Valve control only.
- EPA WaterSense®

Using R60000-UNBX:

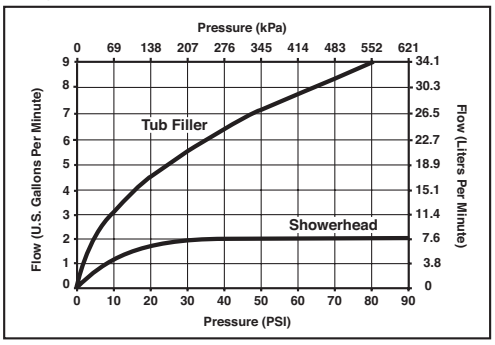


For additional flow rate information reference the Brizo price book.

**Delta Faucet Company**
Indianapolis, Indiana 46280
A Division of Masco Corporation of Indiana
© 2014 Masco Corporation of Indiana

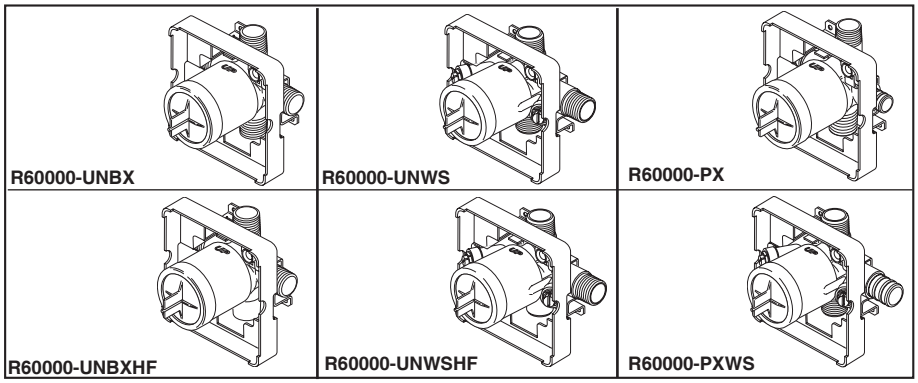


BRIZO®

# MULTICHOICE® UNIVERSAL ROUGH VALVE BODY

- R60000-UNBX (Universal Single Box Model)
- R60000-UNBXHF (High Flow Shower Only)
- R60000-UNWS (Universal with Stops)
- R60000-UNWSHF (High Flow with Stops Shower Only)
- R60000-PX (Pex Crimp Inlets with UN Outlets)
- R60000-PXWS (Pex Crimp Inlets with Stops And UN Outlets)

Submitted Model No.: _____

Specific Features: _____

**R60000-UNBX**

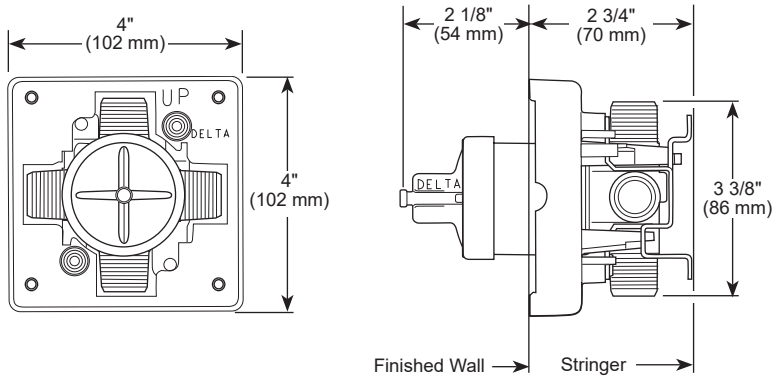


**R60000-UNWS**

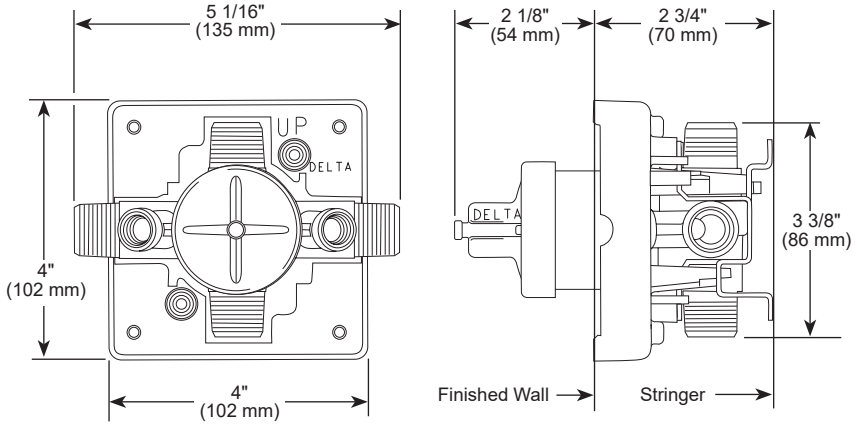


## STANDARD SPECIFICATIONS:

- Forged brass body.
- Back-to-Back installation capabilities.
- Can be tested with air (200 PSI) or water (300 PSI) without valve using supplied test cap.
- Square plasterguard allows for right angle cuts.
- Thin wall mounting.
- For use with MultiChoice® Universal single or dual function trim. Cartridge ships with trim.
- 1/2" outlets and connections.

Note: No tub outlet in HF model.

Note: Should use proper fitting with each type (copper tubing, iron pipe, and pex fitting).

Note: Should use proper tooling with crimping pex fitting.

Note: UN indicates Universal type fitting and is 1/2" NPT male thread with 1/2" C.W.T. female sweat.

## WARRANTY

- Lifetime limited warranty on parts (other than electronic parts and batteries) and finishes: or, for commercial users, for 5 years from date of purchase.
- 5 year limited warranty on electronic parts (other than batteries); or, for commercial users, for 1 year from the date of purchase. No warranty is provided on batteries.

**Extension kits available**

Visit our website at www.brizo.com for specification sheet for trim model to identify appropriate RP.

## COMPLIES WITH:

- ASME A112.18.1 / CSA B125.1

Brizo Kitchen & Bath Company reserves the right (1) to make changes in specifications and materials, and (2) to change or discontinue models, both without notice or obligation. Dimensions are for reference only. See current full-line price book or www.brizo.com for finish options and product availability.

**Brizo Kitchen & Bath Company**
55 E. 111th Street, Indianapolis, Indiana 46280
350 South Edgeware Road, St. Thomas, ON N5P 4L1
© 2017 Brizo Kitchen & Bath Company

BSP-B-R60000 Rev. F

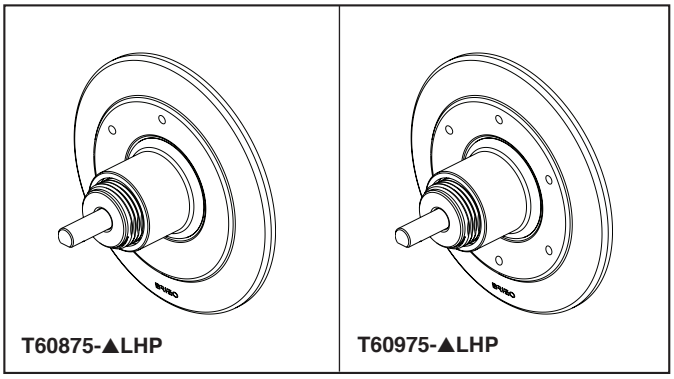


**Submitted Model No.:**_____

**Specific Features:**_____

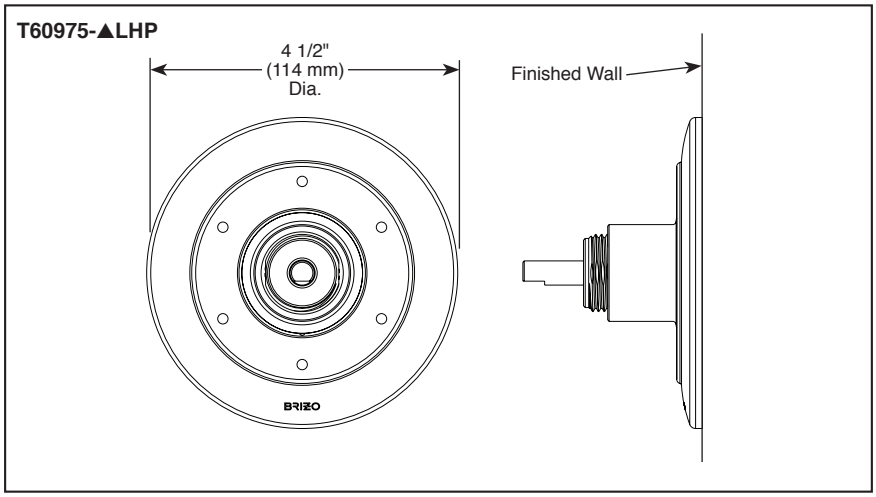


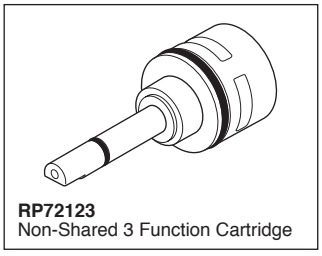

**RP72123**
Non-Shared 3 Function Cartridge

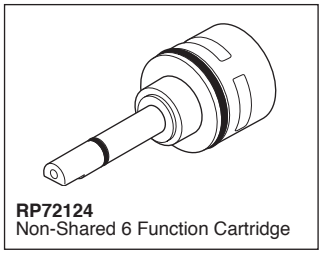

**RP72124**
Non-Shared 6 Function Cartridge

**RP75012**
Available Extension Kit

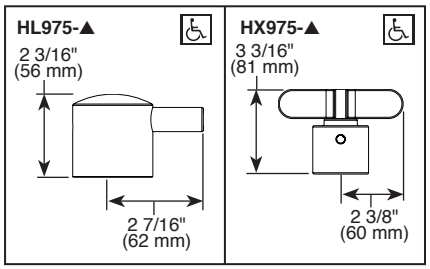


▲ Designate proper finish suffix

BRIZO®

# CUSTOM SHOWER DIVERTER

- Odin™ Collection
- Three Function Diverter Trim (T60875-LHP)
- Six Function Diverter Trim (T60975-LHP)

## STANDARD SPECIFICATIONS

- Three function diverter. 2 individual positions, 1 shared position
- Six function diverter. 3 individual positions, 3 shared positions
- Requires rough-in R60700 to complete installation
- Non shared 3 function cartridge (RP72123) and 6 function cartridge (RP72124) are available
- Rough extension kit (RP75012) available

## WARRANTY

- Parts and Finish - Lifetime limited warranty; or for commercial purchasers, 10 years for multi-family residential (apartments and condominiums) and 5 years for all other commercial uses, in each case from the date of purchase.
- Electronic Parts and Batteries (if applicable) - 5 years from the date of purchase; or for commercial purchasers, 1 year from the date of purchase. No warranty is provided on batteries.

## COMPLIES WITH:

- ASME A112.18.1 / CSA B125.1

Indicates compliance to ICC/ANSI A117.1

Brizo Kitchen & Bath Company reserves the right (1) to make changes in specifications and materials, and (2) to change or discontinue models, both without notice or obligation. Dimensions are for reference only. See current full-line price book or www.brizo.com for finish options and product availability.

BSP-B-T60875-LHP Rev. A

**Brizo Kitchen & Bath Company**
55 E. 111th Street, Indianapolis, Indiana 46280
350 South Edgeware Road, St. Thomas, ON N5P 4L1
© 2020 Brizo Kitchen & Bath Company

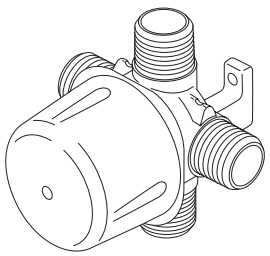

R60700

BRIZO®

# ROUGH VALVE BODY

- R60700 (Case Qty. 3)
- 1/2" Rough-In

**Submitted Model No.:**_____

**Specific Features:**_____

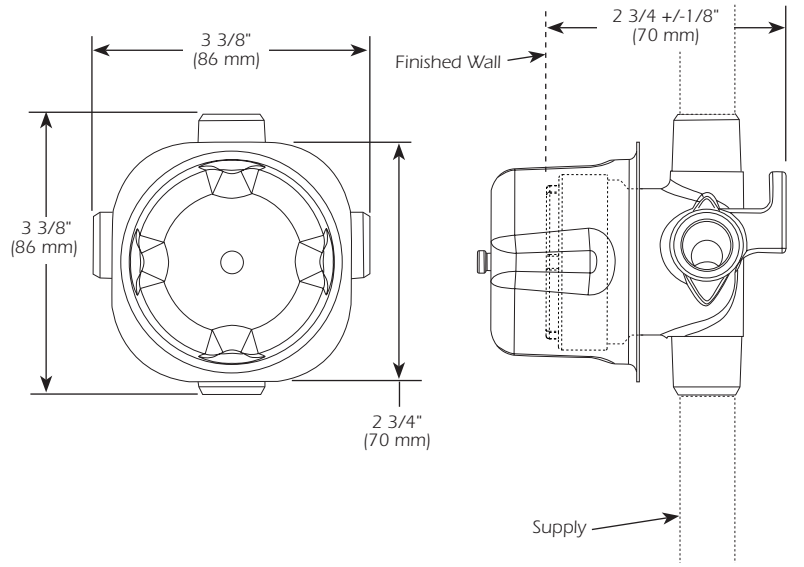


## STANDARD SPECIFICATIONS

- Three port diverter rough.
- For use with (3) three or (6) six function diverter.
- Forged brass body.
- Can be tested with air (200 psi) or water (300 psi) using supplied test cap.
- Refer to the installation instructions for more details

## WARRANTY

- Lifetime limited warranty on parts (other than electronic parts and batteries) and finishes: or, for commercial users, for 5 years from date of purchase.
- 5 year limited warranty on electronic parts (other than batteries); or, for commercial users, for 1 year from the date of purchase. No warranty is provided on batteries.

**RP75012** Available Extension Kit

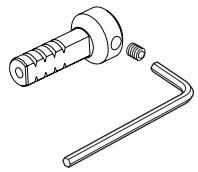

## COMPLIES WITH:

- ASME A112.18.1 / CSA B125.1

Brizo Kitchen & Bath Company reserves the right (1) to make changes in specifications and materials, and (2) to change or discontinue models, both without notice or obligation. Dimensions are for reference only. See current full-line price book or www.brizo.com for finish options and product availability.

BSP-B-R60700 Rev. G

**Brizo Kitchen & Bath Company**
55 E. 111th Street, Indianapolis, Indiana 46280
350 South Edgeware Road, St. Thomas, ON N5P 4L1
© 2018 Brizo Kitchen & Bath Company

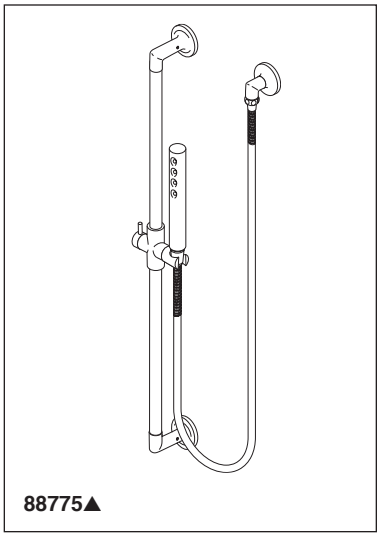


BRIZO®

# HAND SHOWER W/ SLIDE BAR

- Odin™ Bath Collection
- $H_2O$kinetic Technology®

**Submitted Model No.:**_____

**Specific Features:**_____

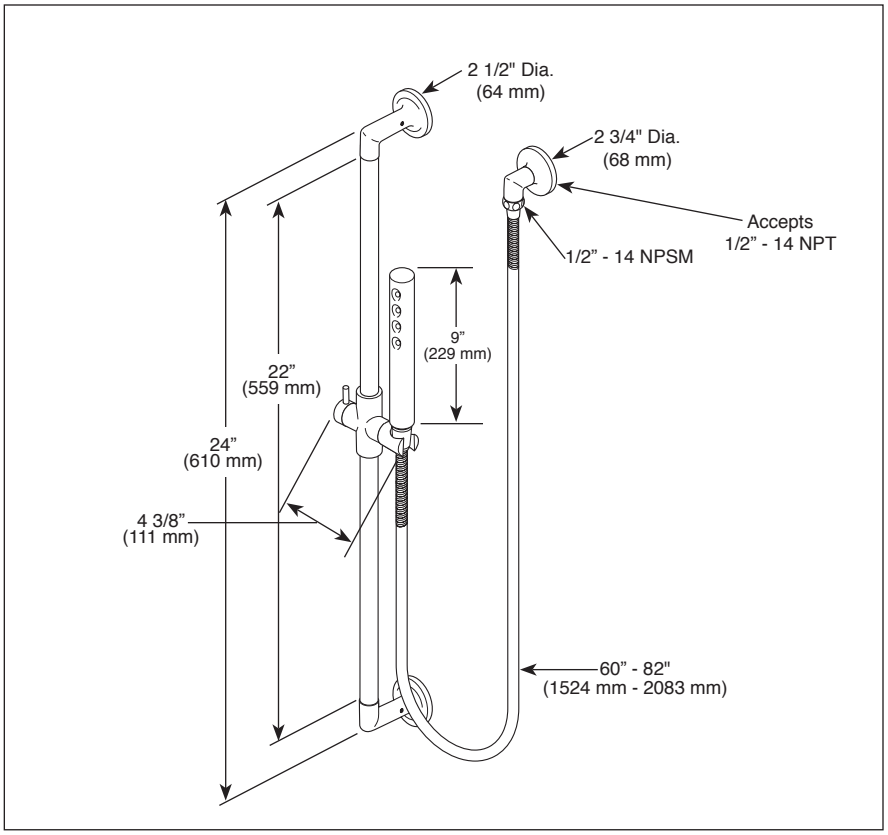


▲ Designate proper finish suffix

**Spray Pattern**

Full Spray

## STANDARD SPECIFICATIONS:

- 2.0 gpm @ 80 psi (7.6 L/min @ 552 kPa)
- Hand shower with full spray pattern.
- Certified dual check valves.
- 24" (610 mm) wall bar with adjustable slide (allows for adjustable shower height). Not to be used as a Grab Bar. Not ADA compliant.
- 60" - 82" (1524 mm - 2083 mm) stretchable finished metal hose.

## WARRANTY

- Lifetime limited warranty on parts (other than electronic parts and batteries) and finishes: or, for commercial users, for 5 years from date of purchase.
- 5 year limited warranty on electronic parts (other than batteries); or, for commercial users, for 1 year from the date of purchase. No warranty is provided on batteries.

## COMPLIES WITH:

- ASME A112.18.1 / CSA B125.1
- EPA WaterSense®

Delta reserves the right (1) to make changes in specifications and materials, and (2) to change or discontinue models, both without notice or obligation. Dimensions are for reference only. See current full-line price book or www.brizo.com for finish options and product availability.

BSP-B-88775 Rev. B

**Delta Faucet Company**
Indianapolis, Indiana 46280
A Division of Masco Corporation of Indiana
© 2014 Masco Corporation of Indiana

# SKU: HX975

Brizo

Specifications Currently Unavailable