SKU: 34464980

Dornbracht

Specifications Currently Unavailable

Bathtub - Concealed rough parts
Rough-in adapter -
Article number: 35 080 970-90 0010

- 1/2" male NPT x 1/2" female straight

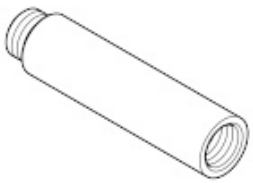

Dimensional drawing

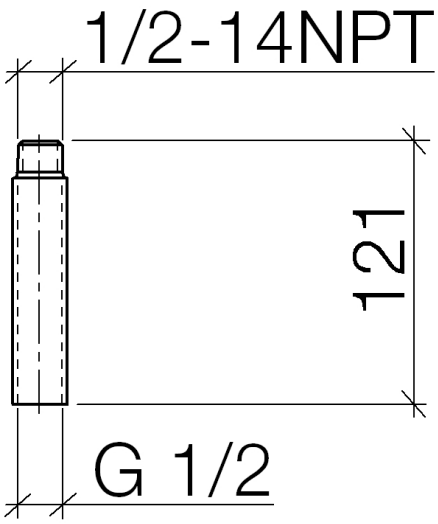

All dimensions in mm / inch = mm x 0,0394

Bathtub - Concealed rough parts
Rough-in adapter -
Article number: 35 080 970-90 0010

Bathtub - Concealed rough parts
Rough-in adapter -
Article number: 35 080 970-90 0010

Spare parts list

Number	Item Number	Designation	Number of units

Hand shower FlowReduce - Brushed Champagne (22kt Gold)

SERIES-VARIOUS

28 018 979 Product version from 10/1/2023

- spray head Ø 100mm
- Three or five settings: COMPACT RAIN, COMPACT SOFT FLOW, COMPACT AQUAPRESSURE FLOW, max. flow rate 6.8 l/min (at 3 bar)
- with anti-scale system
- 1/2" connection
- Function from: 6 l/min

Notes:

- This product can help a building meet the requirements of Green Building Rating Systems, e.g. LEED®, BREEAM®, DGNB

Intrinsic protection against back flow.

Brushed Champagne (22kt Gold)	28 018 979-46 0010
Chrome	28 018 979-00
Chrome	28 018 979-00 0010
Brushed Platinum	28 018 979-06
Brushed Platinum	28 018 979-06 0010
Platinum	28 018 979-08
Platinum	28 018 979-08 0010
Dark Chrome	28 018 979-19
Dark Chrome	28 018 979-19 0010
Light Gold	28 018 979-26 0010
Light Gold	28 018 979-26
Brushed Light Gold	28 018 979-27 0010
Brushed Light Gold	28 018 979-27
Brushed Durabrass (23kt Gold)	28 018 979-28
Brushed Durabrass (23kt Gold)	28 018 979-28 0010
Matte Black	28 018 979-33
Matte Black	28 018 979-33 0010
Brushed Dark Brass	28 018 979-39
Brushed Dark Brass	28 018 979-39 0010
Brushed Bronze	28 018 979-42 0010
Brushed Bronze	28 018 979-42
Brushed Champagne (22kt Gold)	28 018 979-46
Champagne (22kt Gold)	28 018 979-47
Champagne (22kt Gold)	28 018 979-47 0010
Brushed Chrome	28 018 979-93
Brushed Chrome	28 018 979-93 0010

Hand shower FlowReduce - Brushed Champagne (22kt Gold)

SERIES-VARIOUS

28 018 979 Product version from 10/1/2023

Brushed Dark Platinum	28 018 979-99
Brushed Dark Platinum	28 018 979-99 0010

Hand shower FlowReduce - Brushed Champagne (22kt Gold)

SERIES-VARIOUS

28 018 979 Product version from 10/1/2023

mm [inches]

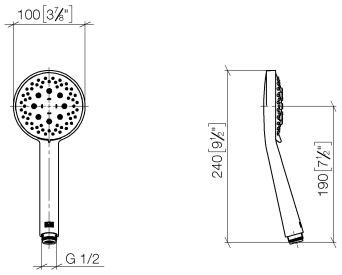

Codes & Standards

ASME A112.18.1	cUPC	DIN 4109	EPA WaterSense
ISO 3822	Ü-Zeichen	WaterSense	

Certificates and sustainability

LGA_29	IAPMO_4976 (	IAPMO_11777

Hand shower FlowReduce - Brushed Champagne (22kt Gold)

SERIES-VARIOUS

28 018 979 Product version from 10/1/2023

Parts for other finishes can be found here: Chrome

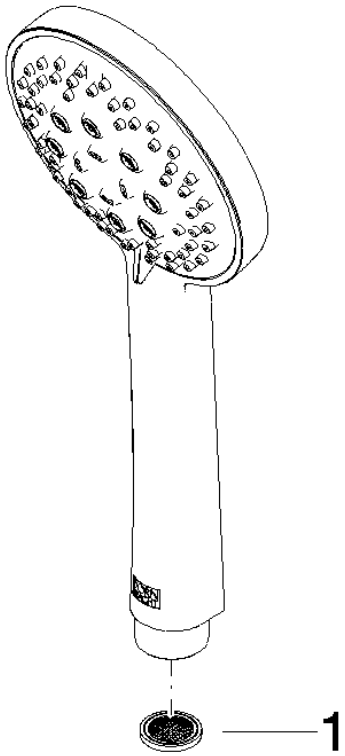

Spare parts list

No.	Item Number	Name	Quantity used	Delivery time
1	09 23 01 039 90	sieve	1.00	2