CHESTNUT
& ELM

Ella

VELA-3621F-S1GG

35¾″ W x 21½″ D x 34″ H

Available in 4 widths: 24″, 30″, 36″, 48″



Freestanding bathroom vanity
Solid wood construction
3 soft-close drawers (removable 6-section dividers in the top drawer)
2 doors with an internal adjustable shelf with a P-trap cutout
Metal base
Adjustable feet for leveling
Hardware included

Available finishes:

- **302** Raven Oak with Satin Brass Hardware
- **401** Ivory Oak with Matte Black Hardware

Base matches vanity hardware

Side View

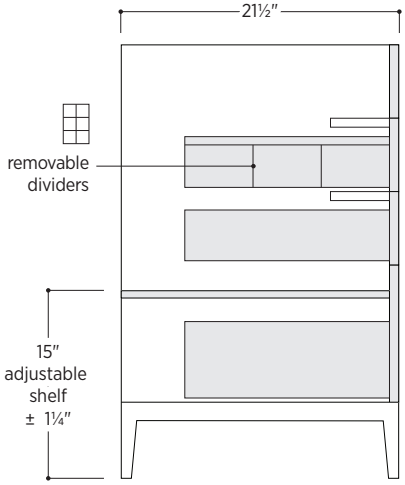

Front View

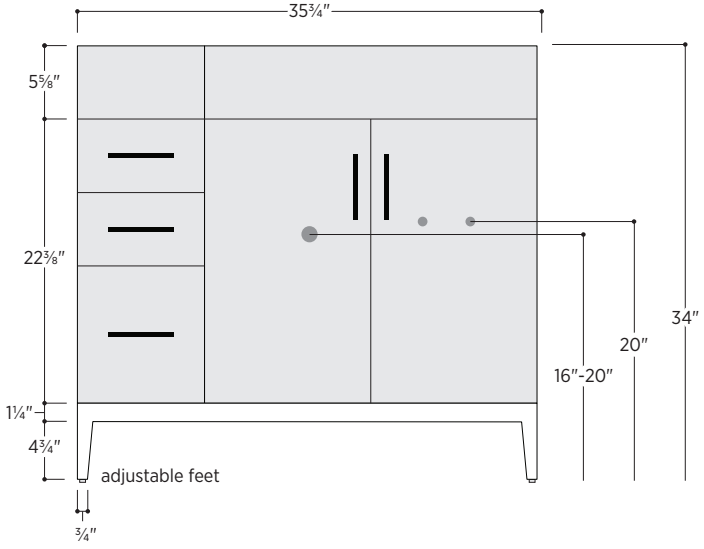

info@chestnutandelm.com

CHESTNUT
& ELM

Mabel Sinktop

SM3622B

36″ W x 22″ D x 2″ H

Available in 4 widths: 24″, 30″, 36″, 48″



One-piece countertop with integrated sink
Backsplash included
Built-in overflow
H-Stone solid surface material

Available finishes:

W White

3-hole

Side View

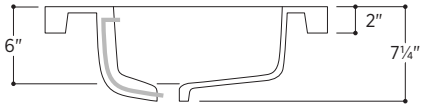

Top View

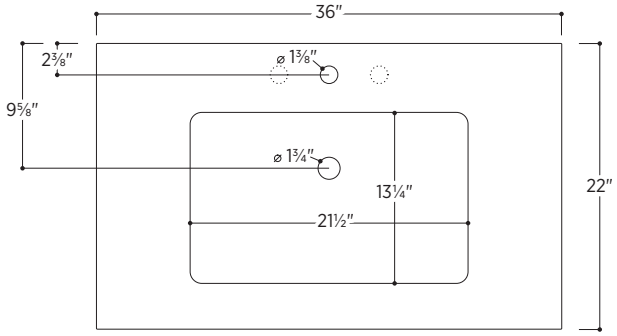

CHESTNUT
& ELM

Betsy

MBTY2832

28″ W x 31⅞″ H x ¾″ D

Available in 2 widths: 22″, 28″

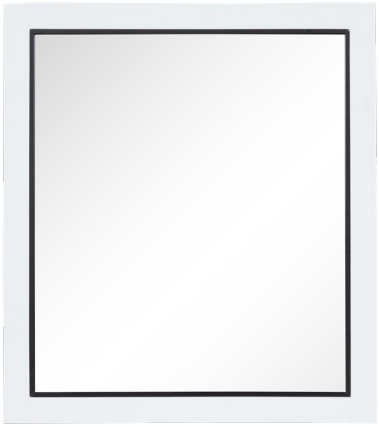

Rectangular mirror with solid wood frame
Metal trim detail
Mounting hardware included
Mounted in portrait orientation
Weight: 13 lbs

Available finishes:

- **101** White with Matte Black Trim
- **202** Black with Brass Trim

Front View

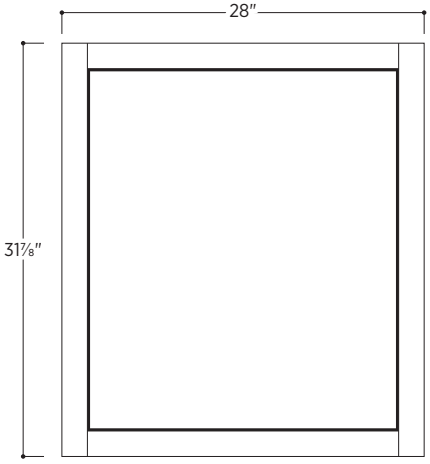

Side View



info@chestnutandelm.com