COYA xTOOL Concealed thermostat - Brushed Platinum

COYA

36 416 404 Product version from 1/1/2026



- Cover plate 4-7/8" x 4-7/8"
- Temperature control handle with safety lock at 100 °F/ 38°C

Brushed Platinum	36 416 404-06
Chrome	36 416 404-00
Dark Chrome	36 416 404-19
Brushed Durabrass (23kt Gold)	36 416 404-28
Brushed Dark Brass (PVD)	36 416 404-39
Brushed Bronze (PVD)	36 416 404-42
Brushed Dark Bronze (PVD)	36 416 404-43
Brushed Champagne (22kt Gold)	36 416 404-46
Champagne (22kt Gold)	36 416 404-47
Brushed Dark Platinum	36 416 404-99

Required article



xTOOL Concealed thermostat rough - 35 517 970-90 0010
- Min. rough in depth 4"
- Max. rough in depth 6-1/8"

Required article



xGRID Installation track 21.85" - 12 360 970 90

Required article



xGRID Mounting bracket for drywall construction - 12 340 970 90

DORN BRACHT

COYA xTOOL Concealed thermostat - Brushed Platinum

COYA

36 416 404 Product version from 1/1/2026

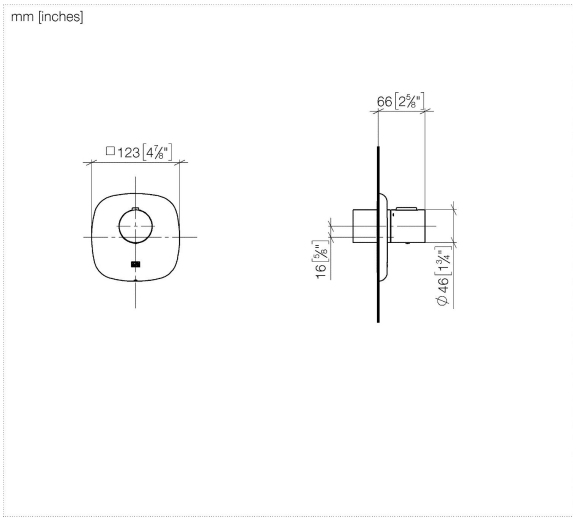

Codes & Standards

ASME A112.18.1 cUPC

Certificates and sustainability

EPD-DOR-20230287 IAPMO_4976 (
-IBA1-EN
Environmental.prod
uct-declarat

COYA xTOOL Concealed thermostat - Brushed Platinum

36 416 404 Product version from 1/1/2026

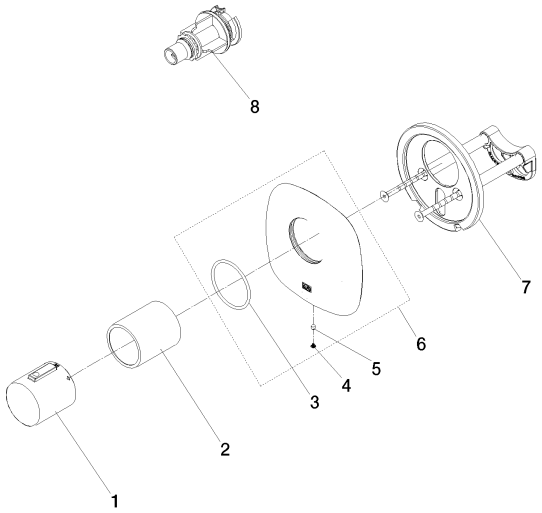

Spare parts list

Number	Item Number	Designation	Number of units	Lead time
2	90 21 02 112 00-06	sleeve	1.00	26
3	90 14 10 049 00 90	seal	1.00	14
6	90 11 02 181 00-06	plate	1.00	26
4	90 31 11 117 00 90	plug	1.00	14
1	90 17 33 020 00-06	handle	1.00	26
5	09 31 11 294 90	pin	1.00	14
8	12 178 970 90	Extension 1-3/4" -	1.00	14
7	90 11 01 196 00 90	base	1.00	14

Volume Control clockwise-closing 1/2"

COYA

36 310 424 Product version from 1/1/2026



- Flange 2-3/8" x 2-3/8"

Chrome	36 310 424-00
Brushed Platinum	36 310 424-06
Dark Chrome	36 310 424-19
Brushed Durabrass (23kt Gold)	36 310 424-28
Brushed Dark Brass (PVD)	36 310 424-39
Brushed Bronze (PVD)	36 310 424-42
Brushed Dark Bronze (PVD)	36 310 424-43
Brushed Champagne (22kt Gold)	36 310 424-46
Champagne (22kt Gold)	36 310 424-47
Brushed Dark Platinum	36 310 424-99

Required article



Rough for volume control clockwise-closing 1/2" - 35 621 970-90 0010
- Min. rough in depth 2-1/2"
- Max. rough in depth 4-7/8"

DORN BRACHT

Volume Control clockwise-closing 1/2"

COYA

36 310 424 Product version from 1/1/2026

mm [inches]



Certificates and sustainability

EPD-DOR-20230287
-IBA1-EN
Environmental.prod
uct-declarat

DORN BRACHT

Volume Control clockwise-closing 1/2"

COYA

36 310 424 Product version from 1/1/2026

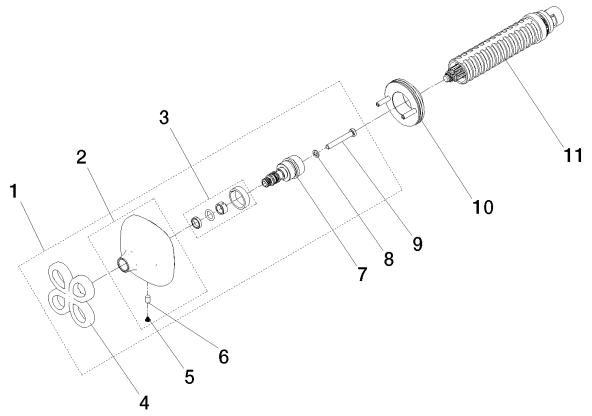

Spare parts list

Number	Item Number	Designation	Number of units	Lead time
10	90 21 02 108 00 90	disc	1.00	14
11	90 90 03 142 00 90	top	1.00	14
6	09 31 11 048 90	pin	1.00	14
8	09 30 11 194 90	disc	1.00	14
1	90 20 40 010 07-00	handle	1.00	26
7	90 29 06 119 00 90	spindle	1.00	14
4	90 20 40 010 00-00	handle	1.00	26
9	09 30 30 158 90	screw	1.00	14
5	90 31 11 117 00 90	plug	1.00	14
3	90 14 15 028 00 90	ring	1.00	14
2	90 27 40 019 00-00	rosette	1.00	26