VAIA Single-lever mixer For sprayer / professional sprayer - Chrome

VAIA

33 826 809 Product version from 7/1/2023



- 9-1/2" Projection
- Swiveling spout 360°
- Aerated stream
- Water flow rate limited to max. 1.5 gpm
- lead-free
- This product can help a building meet the requirements of Green Building Rating Systems, e.g. LEED®, BREEAM®, DGNB

(ADA)

Single-lever mixer for use with rinsers and professional sprayers

Chrome	33 826 809-00 0010
Brushed Platinum	33 826 809-06 0010
Platinum	33 826 809-08 0010
Durabrass (23kt Gold)	33 826 809-09 0010
Dark Chrome	33 826 809-19 0010
Brushed Durabrass (23kt Gold)	33 826 809-28 0010
Matte Black	33 826 809-33 0010
Brushed Dark Brass (PVD)	33 826 809-39 0010
Brushed Bronze (PVD)	33 826 809-42 0010
Brushed Dark Bronze (PVD)	33 826 809-43 0010
Brushed Champagne (22kt Gold)	33 826 809-46 0010
Champagne (22kt Gold)	33 826 809-47 0010
Brushed Chrome	33 826 809-93 0010
Brushed Dark Platinum	33 826 809-99 0010

Recommended article

VAIA AIR SWITCH operating button, trim parts only - Chrome 10 713 809-00

Recommended article



VAIA Side spray set - Chrome 27 718 809-00

Recommended article



VAIA Soap dispenser with flange - Chrome 82 434 809-00

VAIA Single-lever mixer For sprayer / professional sprayer - Chrome

VAIA

33 826 809 Product version from 7/1/2023

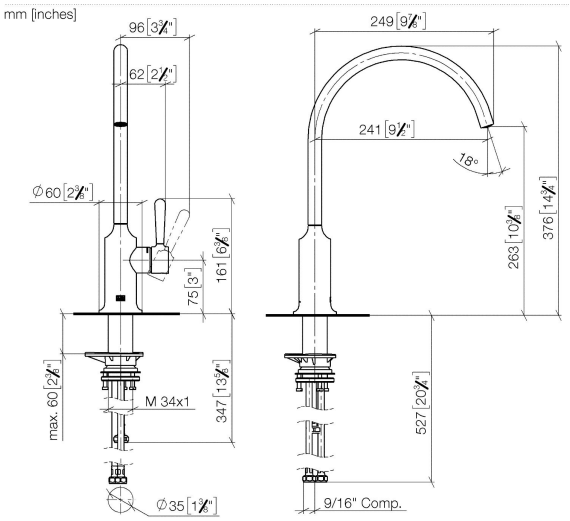

Codes & Standards

ADA	ASME A112.18.1	California Energy Commission (CEC)	cUPC
NSF372	NSF61		

Certificates and sustainability

IAPMO_N-4976	IAPMO_6397	IAPMO_4976 (	EPD-DOR-20230287-IBA1-EN Environmental.product-declarat

DORN BRACHT

VAIA Single-lever mixer For sprayer / professional sprayer - Chrome

33 826 809 Product version from 7/1/2023

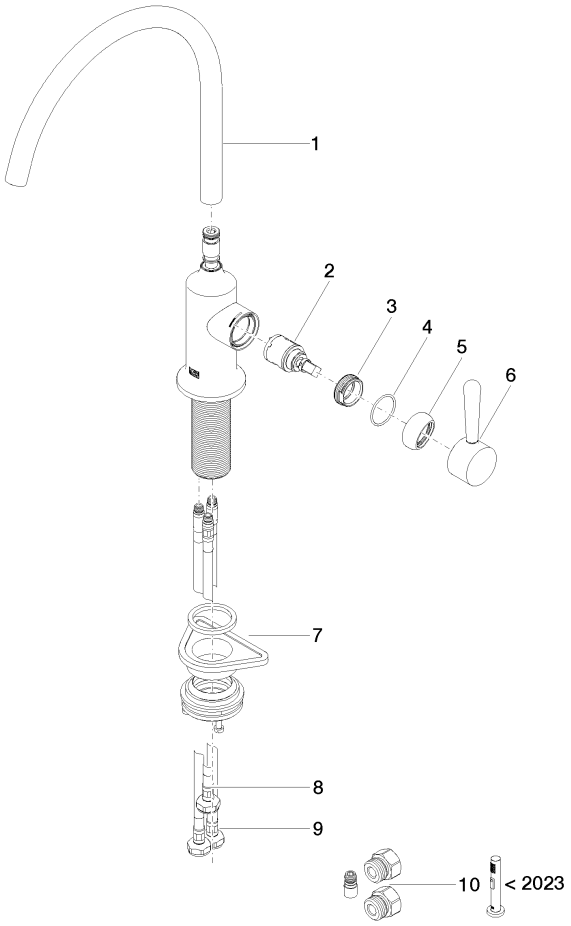

Spare parts list

Number	Item Number	Designation	Number of units	Lead time
2	90 15 05 042 00 90	cartridge	1.00	14
6	90 20 80 050 00-00	handle	1.00	26
1	90 28 22 396 01-00	spout	1.00	26
8	04 30 04 100 00 90	hose	1.00	14
5	90 28 30 052 00-00	cover	1.00	26
9	04 30 04 103 00 90	hose	2.00	14
7	04 23 10 044 08 90	fixing set	1.00	14
3	09 24 04 266 90	nut	1.00	14
4	09 14 10 091 90	seal	1.00	14
10	90 17 09 046 14 90	conversion kit	1.00	14



SKU: 27718809

Dornbracht

Specifications Currently Unavailable