DORN BRACHT

TARA xTOOL Concealed thermostat - Chrome

TARA

36 416 892 Product version from 5/1/2022



- Cover plate Ø 4-7/8"
- Temperature control handle with safety lock at 100 °F/ 38°C
  (ADA)

(ADA)

Chrome	36 416 892-00
Brushed Platinum	36 416 892-06
Platinum	36 416 892-08
Brushed Durabrass (23kt Gold)	36 416 892-28
Matte Black	36 416 892-33
Brushed Dark Brass (PVD)	36 416 892-39
Brushed Bronze (PVD)	36 416 892-42
Brushed Dark Bronze (PVD)	36 416 892-43
Brushed Champagne (22kt Gold)	36 416 892-46
Champagne (22kt Gold)	36 416 892-47
Brushed Chrome	36 416 892-93
Brushed Dark Platinum	36 416 892-99

Required article



xTOOL Concealed thermostat rough - 35 517 970-90 0010

- Max. rough in depth 6-1/8"
- Min. rough in depth 4"

TARA xTOOL Concealed thermostat - Chrome

36 416 892 Product version from 5/1/2022

mm [inches]

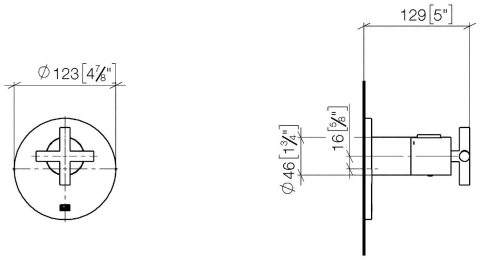

Codes & Standards

ADA

Certificates and sustainability

EPD-DOR-20230287
-IBA1-EN
Environmental.prod
uct-declarat

TARA xTOOL Concealed thermostat - Chrome

36 416 892 Product version from 5/1/2022

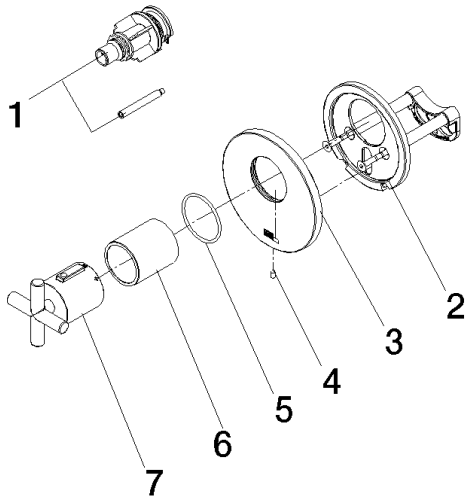

Spare parts list

Number	Item Number	Designation	Number of units	Lead time
3	09 11 02 537-00	cover	1.00	82
1	12 178 970 90	Extension 1-3/4" -	1.00	14
4	09 31 11 048 90	pin	1.00	14
7	90 17 33 027 00-00	handle	1.00	26
2	90 11 01 196 00 90	base	1.00	14
6	90 21 02 112 00-00	sleeve	1.00	26
5	90 14 10 049 00 90	seal	1.00	14

Model/program/technical modifications and error excepted
For more information see: www.dornbracht.com + 49 (0) 2371 8899 900 mail@dornbracht.com

DORN BRACHT

connection

36 310 892



DORN BRACHT

connection

36 310 892

DORN BRACHT

connection

36 310 892

Codes & Standards

ASME A112.18.1 cUPC

Certificates and sustainability

IAPMO_4976 (