Shower thermostat for wall-mounted installation - Chrome

SERIES SPECIFIC

34 445 979 Product version from 6/1/2025



Fits: TARA, VAIA

- Volume control handle to be ordered separately
- with FlowReduce function
- Flanges Ø 2-3/4"
- 3/8" Shower outlet
- 1/2" connection
- Center to center mounts 5-7/8" ± 1/2"

Notes:

Can be combined with hand shower sets and slide bar sets.

Can be combined with hand shower sets and slide bar sets.

Chrome	34 445 979-00
Brushed Platinum	34 445 979-06
Platinum	34 445 979-08
Dark Chrome	34 445 979-19
Brushed Light Gold (PVD)	34 445 979-27
Brushed Durabrass (23kt Gold)	34 445 979-28
Matte Black	34 445 979-33
Brushed Dark Brass (PVD)	34 445 979-39
Brushed Bronze (PVD)	34 445 979-42
Brushed Dark Bronze (PVD)	34 445 979-43
Brushed Champagne (22kt Gold)	34 445 979-46
Champagne (22kt Gold)	34 445 979-47
Brushed Chrome	34 445 979-93
Brushed Dark Platinum	34 445 979-99

Required article



Rough-in adapter - 35 080 970-90
●Please order 2 adapters 0010

Recommended article



TARA Volume control handle - Chrome 11 432 892-00

Recommended article



VAIA Volume control handle - Chrome 11 432 809-00

DORN BRACHT

Shower thermostat for wall-mounted installation - Chrome

SERIES SPECIFIC

34 445 979 Product version from 6/1/2025

mm [inches]

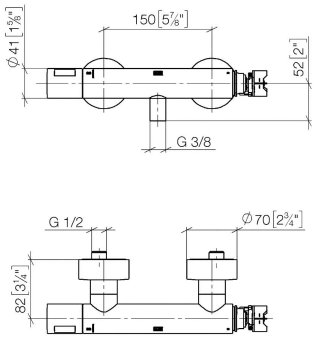

Flow rate chart

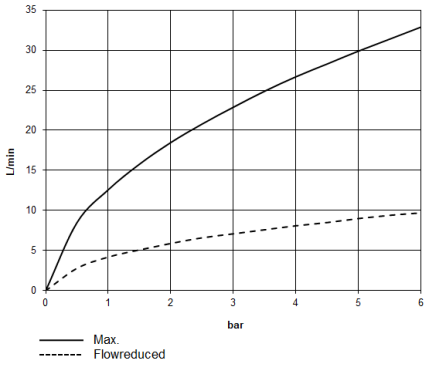

Codes & Standards

DIN 4109	EN 1717	ISO 3822	Ü-Zeichen

Certificates and sustainability

EPD-DOR-20230287 Belgaqua_25-342-2 LGA_39
-IBA1-EN
Environmental.prod
uct-declarat

Shower thermostat for wall-mounted installation - Chrome

SERIES SPECIFIC

34 445 979 Product version from 6/1/2025

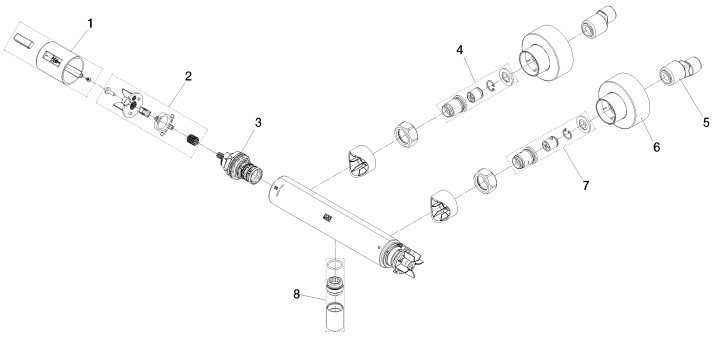

Spare parts list

Number	Item Number	Designation	Number of units	Lead time
2	90 12 12 072 00 90	base	1.00	14
8	90 21 02 069 01-00	cover	1.00	26
6	90 31 20 057 00-00	rosette	1.00	26
1	90 17 33 030 01-00	handle	1.00	26
7	90 31 20 540 00 90	flow reducer	1.00	14
5	04 11 04 030 00 90	connection	1.00	14
4	90 31 20 530 00 90	flow reducer	1.00	14
3	90 15 02 071 00 90	top	1.00	14

TARA Volume control handle - Chrome

TARA

11 432 892 Product version from 9/1/2025



Chrome	11 432 892-00
Brushed Platinum	11 432 892-06
Platinum	11 432 892-08
Dark Chrome	11 432 892-19
Brushed Light Gold (PVD)	11 432 892-27
Brushed Durabrass (23kt Gold)	11 432 892-28
Matte Black	11 432 892-33
Brushed Dark Brass (PVD)	11 432 892-39
Brushed Bronze (PVD)	11 432 892-42
Brushed Dark Bronze (PVD)	11 432 892-43
Brushed Champagne (22kt Gold)	11 432 892-46
Champagne (22kt Gold)	11 432 892-47
Brushed Chrome	11 432 892-93
Brushed Dark Platinum	11 432 892-99

TARA Volume control handle - Chrome

11 432 892 Product version from 9/1/2025

TARA Volume control handle - Chrome

11 432 892 Product version from 9/1/2025

TARA Volume control handle - Chrome

11 432 892 Product version from 9/1/2025

Parts for other
finishes can be found
here: Brushed
Platinum

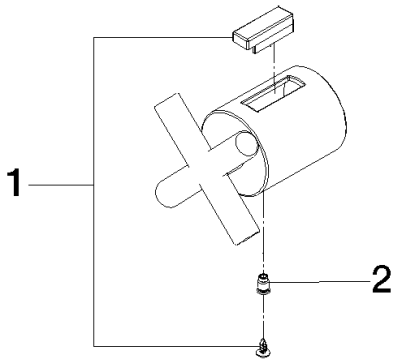

Spare parts list

Number	Item Number	Designation	Number of units	Lead time
1	90 21 33 011 01-13	fixing set	1.00	54
2	90 31 11 517 00 90	pin	1.00	14