LULU xTOOL Concealed thermostat - Chrome

36 416 710 Product version up to 6/30/2020



- Cover plate 4-3/4" x 4-3/4"
- Temperature control handle with safety lock at 100 °F/ 38°C

Chrome	36 416 710-00
Brushed Platinum	36 416 710-06

Required article



xTOOL Concealed thermostat rough - 35 517 970-90 0010
- Min. rough in depth 4"
- Max. rough in depth 6-1/8"

LULU xTOOL Concealed thermostat - Chrome

36 416 710 Product version up to 6/30/2020

mm [inches]

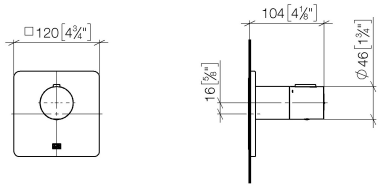

Codes & Standards

ASME A112.18.1	cUPC

Certificates and sustainability

IAPMO_4976 (	EPD-DOR-20230287 -IBA1-EN Environmental.product-declarat

LULU xTOOL Concealed thermostat - Chrome

36 416 710 Product version up to 6/30/2020

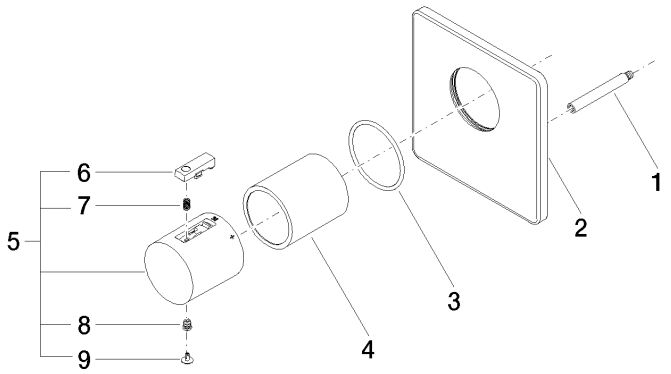

Spare parts list

Number	Item Number	Designation	Number of units	Lead time
7	90 16 02 027 00 90	spring	1.00	14
2	09 11 02 198-00	cover	1.00	26
5	90 17 33 004 00-00	handle	1.00	82
3	90 14 10 049 00 90	seal	1.00	14
8	90 30 30 136 00 90	screw	1.00	14
4	90 21 02 112 00-00	sleeve	1.00	26
1	90 31 09 095 00 90	bar	1.00	14
9	90 31 20 049 00-00	plug	1.00	26
6	90 21 33 011 00-13	handle	1.00	14

LULU Volume Control clockwise-closing 1/2" - Chrome

LULU

36 607 710



- Flange 3-1/8" x 2-1/8"
- Ceramic disc cartridge

Chrome	36 607 710-00
Brushed Platinum	36 607 710-06

Required article



Rough for volume control 1/2" - 35 607 970-90 0010
- Max. rough in depth 5-1/2"
- Min. rough in depth 3-1/8"

LULU Volume Control clockwise-closing 1/2" - Chrome

36 607 710

mm [inches]

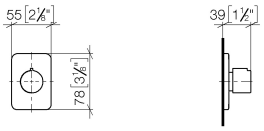

Flow rate chart

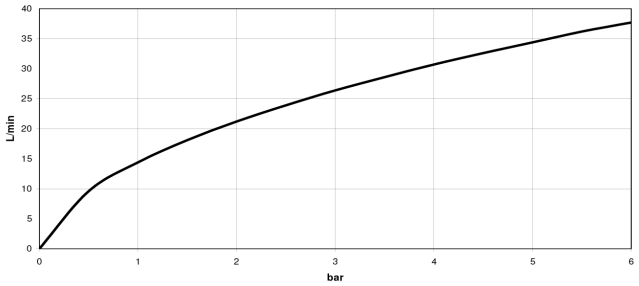

Codes & Standards

ADA	ASME A112.18.1	cUPC	DIN 4109
EN 1111	EN 200	ISO 3822	Scottish Water Byelaws
UK Water Supply Regulations	Ü-Zeichen		

LULU Volume Control clockwise-closing 1/2" - Chrome

36 607 710

Certificates and sustainability

DVGW_DW-6501DN0	LGA_29	DVGW_DW-6512DN0	LGA_29	IAPMO_4976 (
EPD-DOR-20230287-IBA1-EN Environmental.product-declarat	WRAS_260502	WRAS_260602		

LULU Volume Control clockwise-closing 1/2" - Chrome

36 607 710

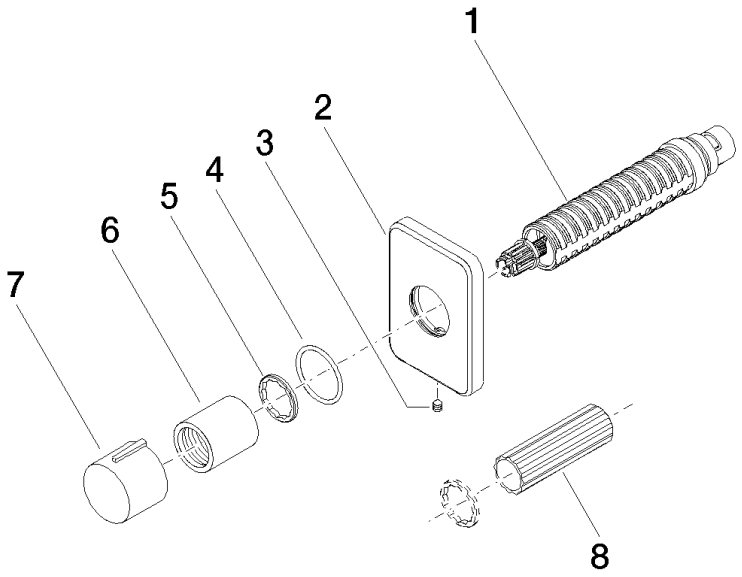

Spare parts list

Number	Item Number	Designation	Number of units	Lead time
2	09 27 71 029-00	rosette	1.00	26
6	09 21 02 070-00	cover	1.00	26
1	90 90 03 143 00 90	top	1.00	14
5	09 16 01 025 90	ring	1.00	14
7	09 20 97 030-00	handle	1.00	54
3	90 31 11 007 00 90	pin	1.00	14
8	90 30 09 010 00 90	key	1.00	14
4	90 14 10 063 00 90	seal	1.00	14