xTOOL Concealed thermostat - Chrome

SERIES SPECIFIC

36 416 780 Product version up to 6/30/2020



Fits: IMO, MEM, CL.1

- Cover plate 4-3/4" x 4-3/4"
- Temperature control handle with safety lock at 100 °F/ 38°C

NOTE: Important! Due to minimum rough-in requirements, a framing of 2 x 6 studs may be needed.

NOTE: Important! Due to minimum rough-in requirements, a framing of 2 x 6 studs may be needed.

Chrome	36 416 780-00
Brushed Platinum	36 416 780-06
Platinum	36 416 780-08
Dark Brass matte	36 416 780-16
Dark Bronze matte	36 416 780-17
Dark Chrome	36 416 780-19
Brushed Durabrass (23kt Gold)	36 416 780-28
Matte Black	36 416 780-33
Brushed Gold (PVD)	36 416 780-37
Brushed Dark Brass (PVD)	36 416 780-39
Brushed Bronze (PVD)	36 416 780-42
Brushed Dark Bronze (PVD)	36 416 780-43
Brushed Champagne (22kt Gold)	36 416 780-46
Champagne (22kt Gold)	36 416 780-47
Cyprum	36 416 780-49
Brushed Chrome	36 416 780-93
Brushed Dark Platinum	36 416 780-99

Required article



xTOOL Concealed thermostat rough - 35 517 970-90 0010

- Min. rough in depth 4-7/8"
- Max. rough in depth 6-1/4"

DORN BRACHT

xTOOL Concealed thermostat - Chrome

SERIES SPECIFIC

36 416 780 Product version up to 6/30/2020

mm [inches]

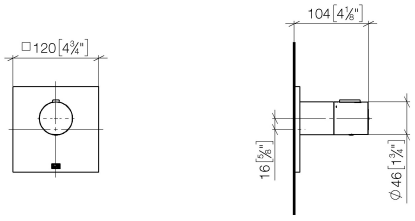

Flow rate chart

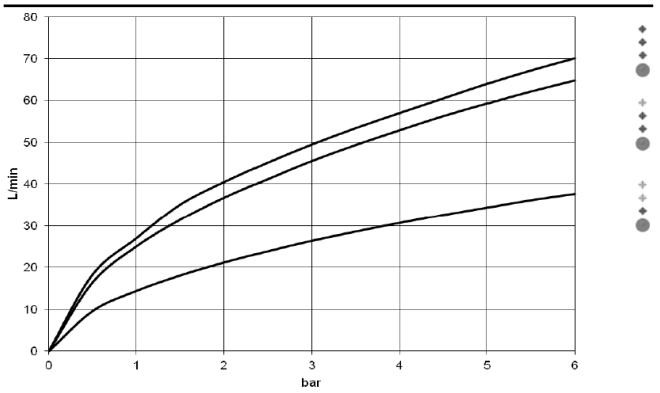

Codes & Standards

ASME A112.18.1 cUPC

Certificates and sustainability

IAPMO_4976 (	EPD-DOR-20230287-IBA1-EN Environmental.product-declarat

DORN BRACHT

xTOOL Concealed thermostat - Chrome

SERIES SPECIFIC

36 416 780 Product version up to 6/30/2020

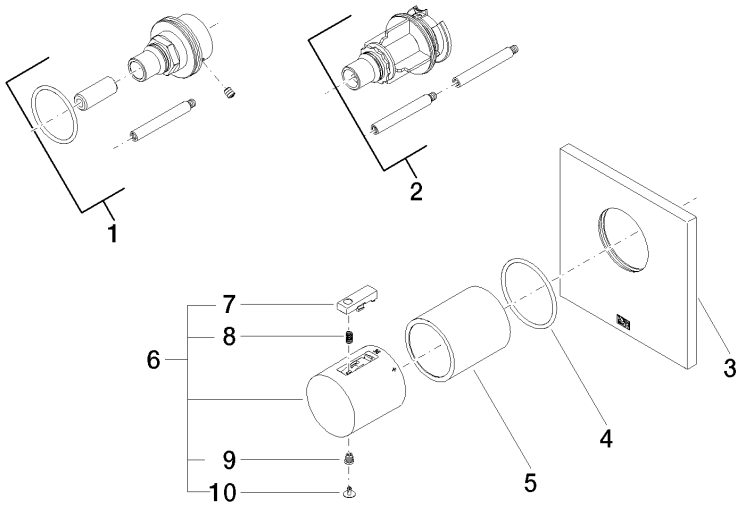

Spare parts list

Number	Item Number	Designation	Number of units	Lead time
2	12 178 970 90	Extension 1-3/4" -	1.00	14
1	12 177 970 90	Extension 1-1/8" -	1.00	14
3	09 11 02 196-00	cover	1.00	82
6	90 17 33 004 00-00	handle	1.00	82
8	90 16 02 027 00 90	spring	1.00	14
5	90 21 02 112 00-00	sleeve	1.00	26
10	90 31 20 049 00-00	plug	1.00	26
9	90 30 30 136 00 90	screw	1.00	14
4	90 14 10 049 00 90	seal	1.00	14
7	90 21 33 011 00-13	handle	1.00	14

MEM Volume Control - Chrome

MEM

36 310 782 Product version from 3/10/2014 to 10/14/2020



● Flange 2-3/8" x 2-3/8"
(ADA)

NOTE: Important! Due to minimum rough-in requirements, a framing of 2 x 6 studs may be needed.

(ADA)

NOTE: Important! Due to minimum rough-in requirements, a framing of 2 x 6 studs may be needed.

Chrome	36 310 782-00
Brushed Platinum	36 310 782-06
Platinum	36 310 782-08
Dark Chrome	36 310 782-19
Brushed Durabrass (23kt Gold)	36 310 782-28
Brushed Dark Brass (PVD)	36 310 782-39
Brushed Bronze (PVD)	36 310 782-42
Brushed Dark Bronze (PVD)	36 310 782-43
Brushed Champagne (22kt Gold)	36 310 782-46
Champagne (22kt Gold)	36 310 782-47
Cyprum	36 310 782-49
Brushed Chrome	36 310 782-93
Brushed Dark Platinum	36 310 782-99

Required article



Rough for volume control clockwise-closing 1/2" - 35 621 970-90 0010
●Min. rough in depth 3-3/8"
●Max. rough in depth 5-1/4"

DORN BRACHT

MEM Volume Control - Chrome

36 310 782 Product version from 3/10/2014 to 10/14/2020

mm [inches]

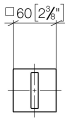

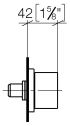

Codes & Standards

ADA	ASME A112.18.1	cUPC

Certificates and sustainability

IAPMO_4976 (	EPD-DOR-20230287 -IBA1-EN Environmental.prod uct-declarat

MEM Volume Control - Chrome

36 310 782 Product version from 3/10/2014 to 10/14/2020

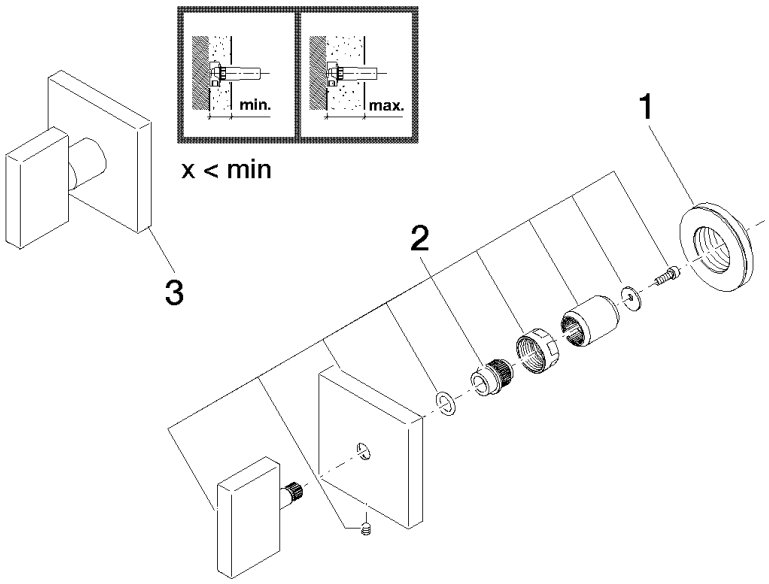

Spare parts list

Number	Item Number	Designation	Number of units	Lead time
1	09 21 02 108 90	disc	1.00	82
2	90 20 78 002 02-00	handle	1.00	14
3	90 20 78 002 01-00	handle	1.00	26