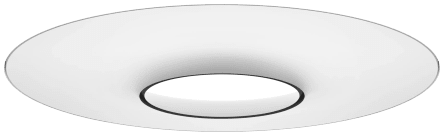

SKU: 41615979

Dornbracht

Specifications Currently Unavailable

SKU: 35615970-900010

Dornbracht

Specifications Currently Unavailable

Hand shower set with integrated wall bracket - Chrome

SERIES SPECIFIC

27 812 660 Product version from 9/1/2025

Fits: TARA, VAIA, META

- COMPACT RAIN, flow rate max. 1.8 gpm (at 3 bar)
- Function from: 1.3 gpm
- Internal back flow preventer
- Descaling system
- Metal shower hose 49-1/4" with anti-twist device

Technical data:

- Flange diameter 2-3/8"
- 1/2" connection

Notes:

- This product reduces water consumption by 47% (compared to requirements of EPAct '92)
- This product contributes to meeting the requirements of the LEED® Green Building Rating
- This product can help a building meet the requirements of Green Building Rating Systems, e.g. LEED®, BREEAM®, DGNB

Chrome	27 812 660-00 0010
Brushed Platinum	27 812 660-06 0010
Platinum	27 812 660-08 0010
Dark Chrome	27 812 660-19 0010
Light Gold (PVD)	27 812 660-26 0010
Brushed Light Gold (PVD)	27 812 660-27 0010
Brushed Durabrass (23kt Gold)	27 812 660-28 0010
Matte Black	27 812 660-33 0010
Brushed Gold (PVD)	27 812 660-37 0010
Brushed Dark Brass (PVD)	27 812 660-39 0010
Brushed Bronze (PVD)	27 812 660-42 0010
Brushed Dark Bronze (PVD)	27 812 660-43 0010
Brushed Champagne (22kt Gold)	27 812 660-46 0010
Champagne (22kt Gold)	27 812 660-47 0010
Brushed Chrome	27 812 660-93 0010
Brushed Dark Platinum	27 812 660-99 0010

Recommended article

Rough-in adapter - 35 080 970-90 0010

Hand shower set with integrated wall bracket - Chrome

SERIES SPECIFIC

27 812 660 Product version from 9/1/2025

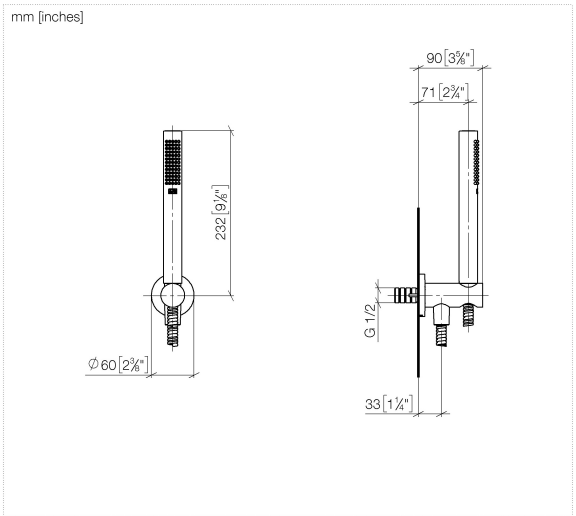

Codes & Standards

ASME A112.18.1	cUPC	EPA WaterSense	WaterSense

Certificates and sustainability

IAPMO_4976 (IAPMO_11777

Hand shower set with integrated wall bracket - Chrome

SERIES SPECIFIC

27 812 660 Product version from 9/1/2025

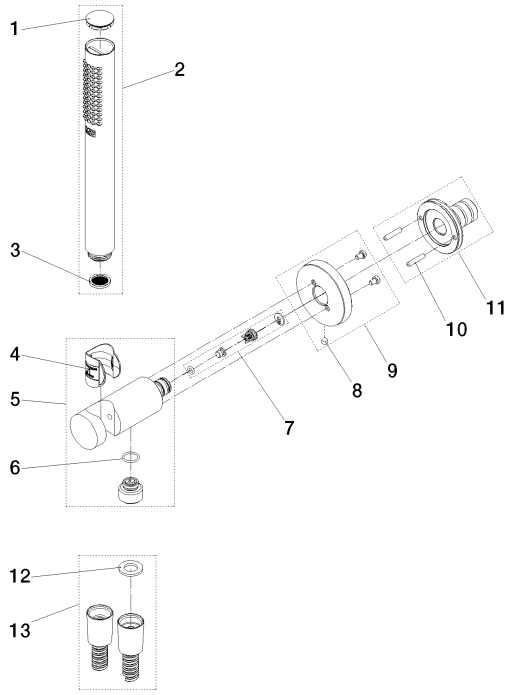

Spare parts list

Number	Item Number	Designation	Number of units	Lead time
10	90 24 03 325 00 90	nipple	1.00	2
7	90 23 01 131 00 90	back-flow preventer	1.00	2
9	90 27 66 029 00-00	rosette	1.00	10
11	04 31 11 115 00 90	pin	1.00	2
1	09 21 02 170-00	cap	1.00	10
4	09 18 40 216 90	sleeve	1.00	2
12	90 14 20 026 00 90	seal	1.00	2
5	90 11 03 137 00-00	connection	1.00	10
6	09 14 10 213 90	seal	1.00	2
8	90 31 11 112 00 90	pin	1.00	2
3	09 23 01 039 90	sieve	1.00	2
2	90 12 11 140 41-00	shower	1.00	10
13	90 30 02 008 00-00	hose	1.00	10

Bath & Spa
TARA .LOGIC Wall elbow, 1/2"
Article number: 28450625

Product specifications

• 3/8" shower hose connection with back flow preventer
• Flange diameter 2 1/8"
Only for combination with 26 403 625-FF / 26 402 625-FF/ 26 403 979-FF / 27 805 625-FF/ 27 806 625-FF
Internal backflow preventer.
For shower hose with a 1/2" connection, please order adapter 12 202 979-FF

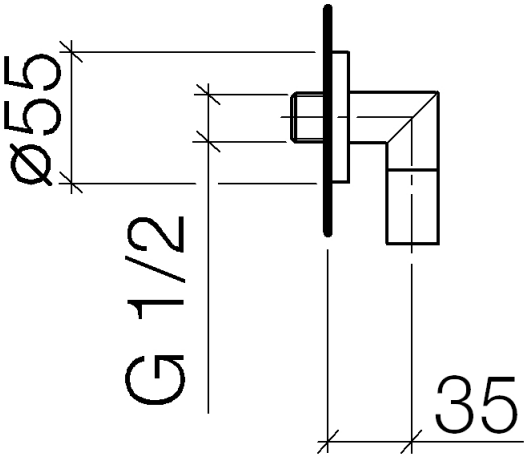

Surfaces

• chrome	28450625-00
• chrome	28450625-00
• matt platinum	28450625-06
• matt platinum	28450625-06

Accessories required

• Rough-in adaptor; 35080970
• Rough-in adaptor; 35080970

ALOYS F. DORNBRACHT GMBH & CO KG ARMATURENFABRIK KÖBBINGSER MÜHLE 6 58640 ISERLOHN
TEL. +49(0)2371 433-0 FAX +49(0)2371 433-232 E-MAIL: MAIL@DORNBRACHT.DE WEB: WWW.DORNBRACHT.COM

Exploded assembly drawing

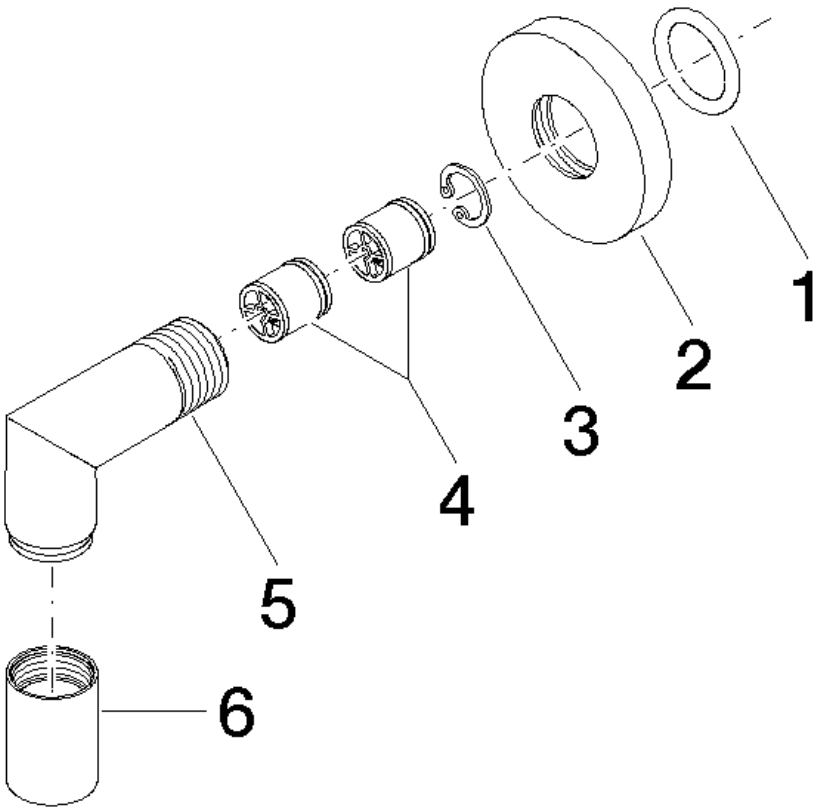

ALOYS F. DORNBRACHT GMBH & CO KG ARMATURENFABRIK KÖBBINGSER MÜHLE 6 58640 ISERLOHN
TEL. +49(0)2371 433-0 FAX +49(0)2371 433-232 E-MAIL: MAIL@DORNBRACHT.DE WEB: WWW.DORNBRACHT.COM

Order quantity

No.	Article number	Name	Installation quantity
1	09141002690	seal	1
2	092722003ff	rosette	1
3	09160101490	ring	1
4	09230104090	back-flow preventer	2
5	091103036ff	connection	1
6	092102069ff	cover	1

ALOYS F. DORNBRACHT GMBH & CO KG ARMATURENFABRIK KÖBBINGSER MÜHLE 6 58640 ISERLOHN
TEL. +49(0)2371 433-0 FAX +49(0)2371 433-232 E-MAIL: MAIL@DORNBRACHT.DE WEB: WWW.DORNBRACHT.COM

Bathtub - Concealed rough parts
Rough-in adapter -
Article number: 35 080 970-90 0010

- 1/2" male NPT x 1/2" female straight

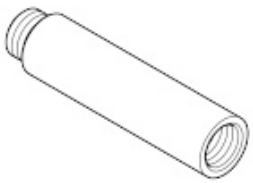

Dimensional drawing

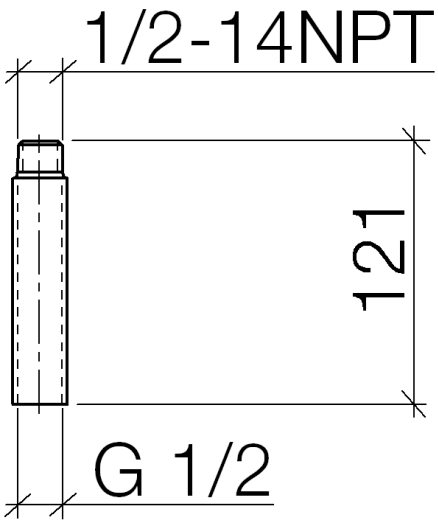

All dimensions in mm / inch = mm x 0,0394

Bathtub - Concealed rough parts
Rough-in adapter -
Article number: 35 080 970-90 0010

Bathtub - Concealed rough parts
Rough-in adapter -
Article number: 35 080 970-90 0010

Spare parts list

Number	Item Number	Designation	Number of units

Bathtub - Meta
xTOOL Concealed thermostat without volume control 3/4" - platinum matte
Article number: 36 503 979-06

- Cover plate Ø 4-7/8"
- Temperature control handle with safety lock at 100 °F/ 38°C
- Thermostat cartridge
- Fittings group in compliance with DIN 4109: 2

platinum matte

Accessory is required for this item.

Discontinued items available to order until 31.12.9999

Dimensional drawing

mm [inches]

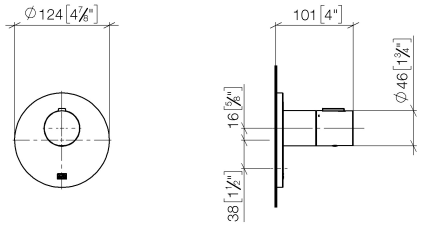

All dimensions in mm / inch = mm x 0,0394

Bathtub - Meta
xTOOL Concealed thermostat without volume control 3/4" - platinum matte
Article number: 36 503 979-06

Bathtub - Meta
xTOOL Concealed thermostat without volume control 3/4" - platinum matte
Article number: 36 503 979-06

Other surface finishes

polished chrome

36 503 979-00

platinum

36 503 979-08

Durabrass

36 503 979-09

white matte

36 503 979-10

Brushed Durabrass

36 503 979-28

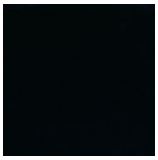

black matte

36 503 979-33

chrome matte

36 503 979-93

Dark Platinum matte

36 503 979-99

More custom finish options are available via special production (xTra Service). Please see our finish matrix for availability and pricing or contact a Dornbracht representative.

35 503 970-90 0010

xTOOL Concealed thermostat rough without volume control 3/4" -

Bathtub - Meta
xTOOL Concealed thermostat without volume control 3/4" - platinum matte
Article number: 36 503 979-06

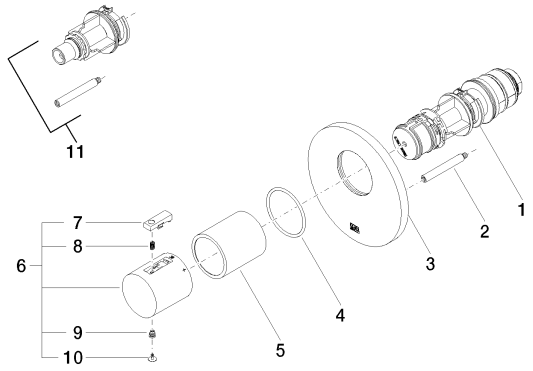

Spare parts list

Number	Item Number	Designation	Number of units
1	90 15 02 065 00 90	cartridge	1
2	04 31 09 095 00 90	bar	1
3	09 11 02 162-06	cover	1
4	09 14 10 049 90	seal	1
5	09 21 02 112-06	sleeve	1
6	04 17 33 004 01-06	handle	1
7	09 21 33 010-13	handle	1
8	09 16 02 027 90	spring	1
9	09 30 30 136 90	screw	1
10	09 31 20 049-13	plug	1
11	12 178 970 90	Extension 1-3/4" -	1

DEQUE Wall valve

Article number: 36310740

Product specifications

Exposed trim parts only, rough to be ordered separately

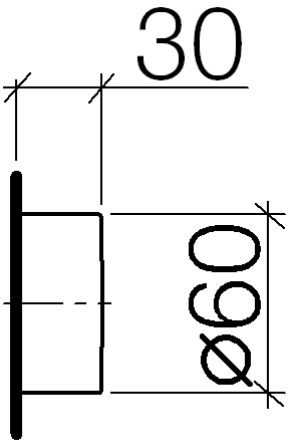

Surfaces

• chrome	36310740-00
• matt platinum	36310740-06
• matt black	36310740-33

Accessories required

• Rough for wall-mounted volume control – 1/2" clockwise closing; 35621970

• Rough for wall-mounted volume control – 3/4" clockwise closing; 35622970

ALOYS F. DORNBRACHT GMBH & CO KG ARMATURENFABRIK KÖBBINGSER MÜHLE 6 58640 ISERLOHN
TEL. +49(0)2371 433-0 FAX +49(0)2371 433-232 E-MAIL: MAIL@DORNBRACHT.DE WEB: WWW.DORNBRACHT.COM

Exploded assembly drawing

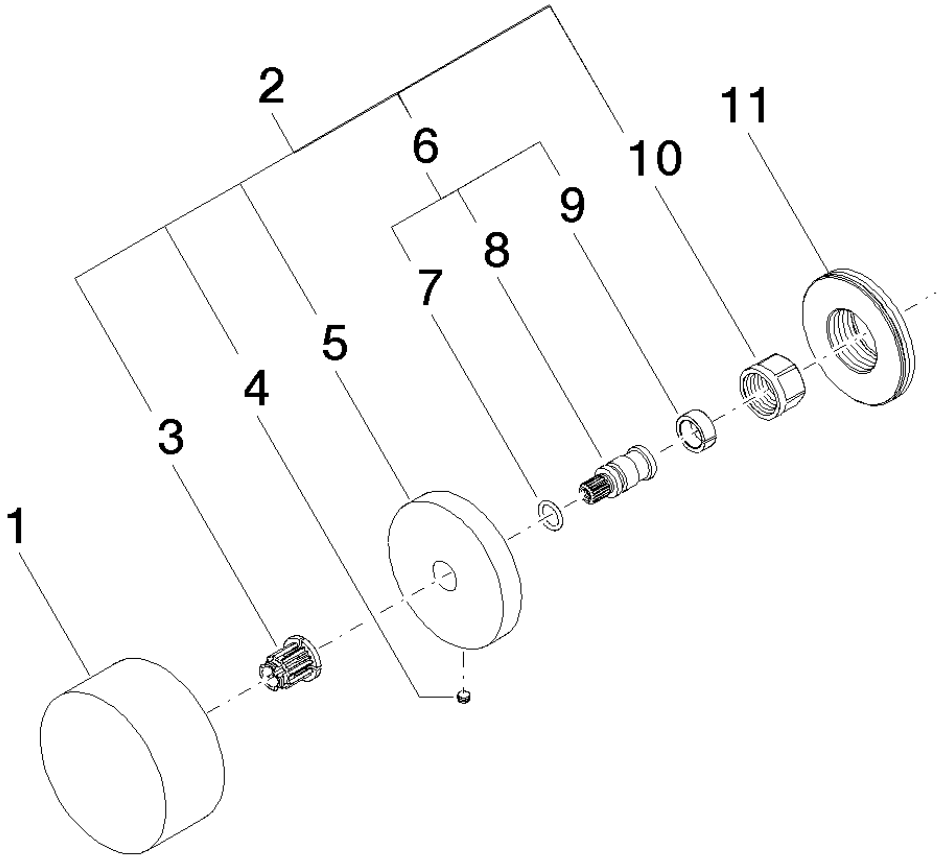

ALOYS F. DORNBRACHT GMBH & CO KG ARMATURENFABRIK KÖBBINGSER MÜHLE 6 58640 ISERLOHN
TEL. +49(0)2371 433-0 FAX +49(0)2371 433-232 E-MAIL: MAIL@DORNBRACHT.DE WEB: WWW.DORNBRACHT.COM

Order quantity

No.	Article number	Name	Installation quantity
1	092074004ff	handle	1
2	04277400200ff	rosette	1
3	09121200290	fixing cap	1
4	09311105590	pin	1
5	092774002ff	rosette	1
6	04290602000ff	spindle	1
7	09141006090	seal	1
8	092906020ff	spindle	1
9	09141502090	ring	1
10	09233002390	nut	1
11	09300110790	sleeve	1

ALOYS F. DORNBRACHT GMBH & CO KG ARMATURENFABRIK KÖBBINGSER MÜHLE 6 58640 ISERLOHN
TEL. +49(0)2371 433-0 FAX +49(0)2371 433-232 E-MAIL: MAIL@DORNBRACHT.DE WEB: WWW.DORNBRACHT.COM

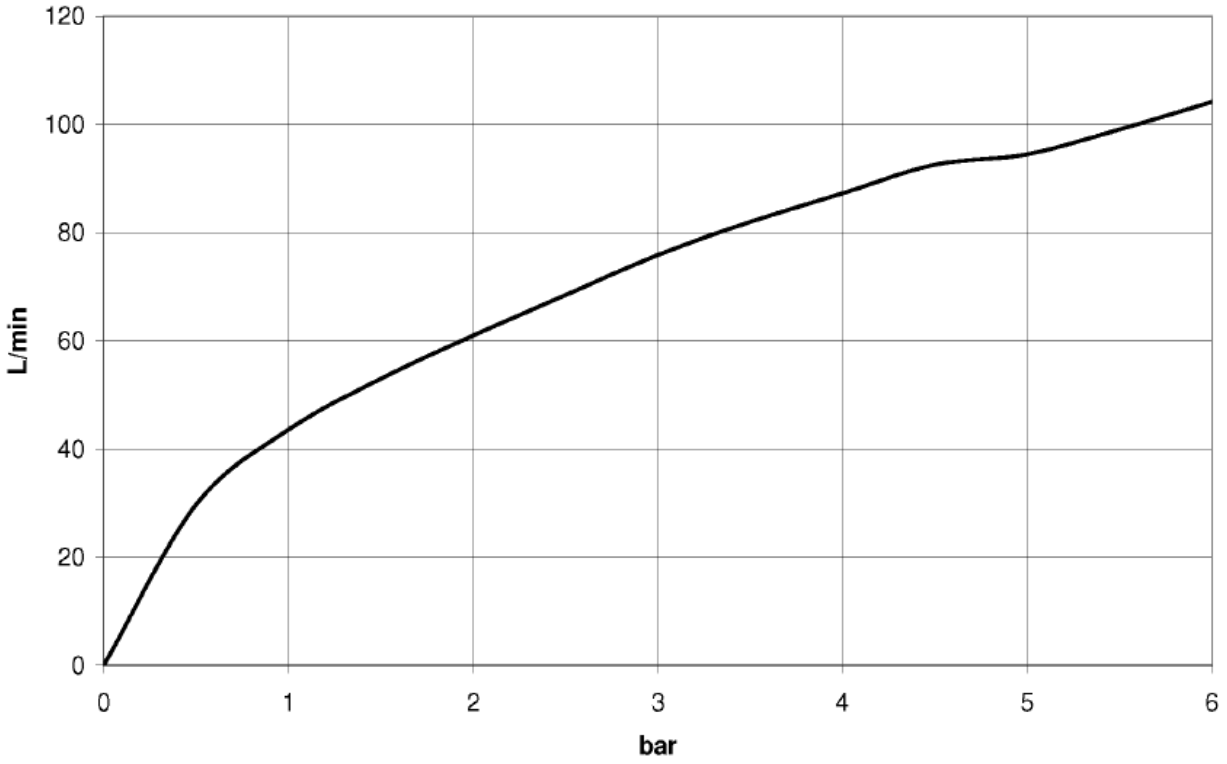

ALOYS F. DORNBRACHT GMBH & CO KG ARMATURENFABRIK KÖBBINGSER MÜHLE 6 58640 ISERLOHN
TEL. +49(0)2371 433-0 FAX +49(0)2371 433-232 E-MAIL: MAIL@DORNBRACHT.DE WEB: WWW.DORNBRACHT.COM

Shower - FM products
xTOOL Concealed thermostat rough with three volume controls -
: 35 547 970-90 0010

- 2x Shaft and sleeve can be cut to length
- 2x back flow preventer
- 2x Water protection
- 3x Mud guard
- 1/2" connection
- brass, lead free
- Sound insulation
- Center to center 4-3/4"
- Thermostat cartridge
- Integrated supply stops
- 2x connections 3/4" (hot/cold)
- NOTE: Important for certain series! Due to minimum rough-in requirements, a framing of 2x6 studs is needed.

Dimensional drawing

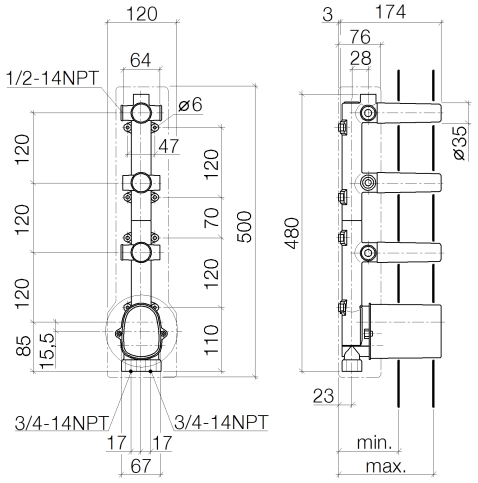

Source	min 78	max 114
Circle	80	110
Lulu	80	110
Madison	80	110
Madison Flair	80	110
TARA LOGIC	80	110
Meta.02	80	110
Soul	80	110
Square	80	110
Cult	80	110
L'Aura	80	110
Domicil	85	110
Just	80	155
LaFleur	95	160
SUPERNOVA	95	160
Symetrica	95	160
DEQUE	95	160
Tara.	95	160
MEM	115	156
CL.1	115	156

Shower - FM products
xTOOL Concealed thermostat rough with three volume controls -
: 35 547 970-90 0010

Recommended article

12 177 970 90
Extension 1-1/8" -

12 178 970 90
Extension 1-3/4" -