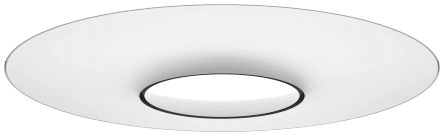

SKU: 41615979

Dornbracht

Specifications Currently Unavailable

SKU: 35615970-900010

Dornbracht

Specifications Currently Unavailable

Hand shower set with integrated wall bracket - Chrome

SERIES SPECIFIC

27 812 660 Product version from 9/1/2025

Fits: TARA, VAIA, META

- COMPACT RAIN, flow rate max. 1.8 gpm (at 3 bar)
- Function from: 1.3 gpm
- Internal back flow preventer
- Descaling system
- Metal shower hose 49-1/4" with anti-twist device

Technical data:

- Flange diameter 2-3/8"
- 1/2" connection

Notes:

- This product reduces water consumption by 47% (compared to requirements of EPAct '92)
- This product contributes to meeting the requirements of the LEED® Green Building Rating
- This product can help a building meet the requirements of Green Building Rating Systems, e.g. LEED®, BREEAM®, DGNB

Chrome	27 812 660-00 0010
Brushed Platinum	27 812 660-06 0010
Platinum	27 812 660-08 0010
Dark Chrome	27 812 660-19 0010
Light Gold (PVD)	27 812 660-26 0010
Brushed Light Gold (PVD)	27 812 660-27 0010
Brushed Durabrass (23kt Gold)	27 812 660-28 0010
Matte Black	27 812 660-33 0010
Brushed Gold (PVD)	27 812 660-37 0010
Brushed Dark Brass (PVD)	27 812 660-39 0010
Brushed Bronze (PVD)	27 812 660-42 0010
Brushed Dark Bronze (PVD)	27 812 660-43 0010
Brushed Champagne (22kt Gold)	27 812 660-46 0010
Champagne (22kt Gold)	27 812 660-47 0010
Brushed Chrome	27 812 660-93 0010
Brushed Dark Platinum	27 812 660-99 0010

Recommended article

Rough-in adapter - 35 080 970-90 0010

Hand shower set with integrated wall bracket - Chrome

SERIES SPECIFIC

27 812 660 Product version from 9/1/2025

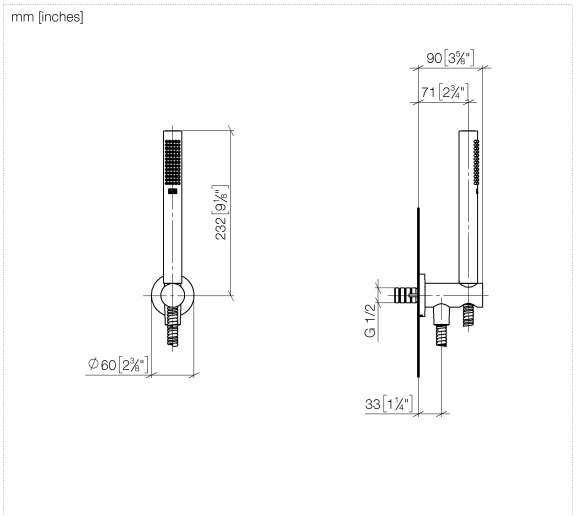

Codes & Standards

ASME A112.18.1	cUPC	EPA WaterSense	WaterSense

Certificates and sustainability

IAPMO_4976 (IAPMO_11777

Hand shower set with integrated wall bracket - Chrome

SERIES SPECIFIC

27 812 660 Product version from 9/1/2025

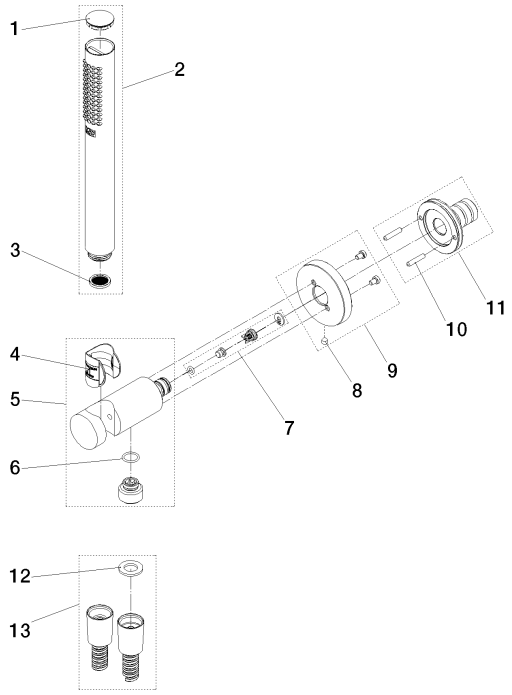

Spare parts list

Number	Item Number	Designation	Number of units	Lead time
10	90 24 03 325 00 90	nipple	1.00	2
7	90 23 01 131 00 90	back-flow preventer	1.00	2
9	90 27 66 029 00-00	rosette	1.00	10
11	04 31 11 115 00 90	pin	1.00	2
1	09 21 02 170-00	cap	1.00	10
4	09 18 40 216 90	sleeve	1.00	2
12	90 14 20 026 00 90	seal	1.00	2
5	90 11 03 137 00-00	connection	1.00	10
6	09 14 10 213 90	seal	1.00	2
8	90 31 11 112 00 90	pin	1.00	2
3	09 23 01 039 90	sieve	1.00	2
2	90 12 11 140 41-00	shower	1.00	10
13	90 30 02 008 00-00	hose	1.00	10

Bathtub - Concealed rough parts
Rough-in adapter -
Article number: 35 080 970-90 0010

- 1/2" male NPT x 1/2" female straight

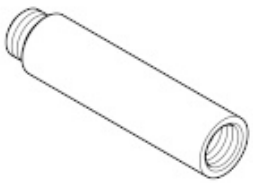

Dimensional drawing

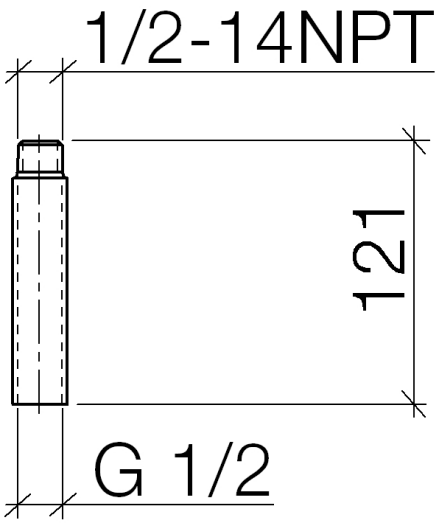

All dimensions in mm / inch = mm x 0,0394

Bathtub - Concealed rough parts
Rough-in adapter -
Article number: 35 080 970-90 0010

Bathtub - Concealed rough parts
Rough-in adapter -
Article number: 35 080 970-90 0010

Spare parts list

Number	Item Number	Designation	Number of units

Shower - Meta
Concealed thermostat with three-way volume control - polished chrome
Article number: 36 428 970-00 0010

- Diverter with integrated volume control and integrated stops
- Cover plate Ø 5-7/8"
- Temperature control handle with safety lock at 100 °F/ 38°C
- Max. temperature can be set on the trim
- (ADA)

polished chrome

Accessory is required for this item.

Dimensional drawing

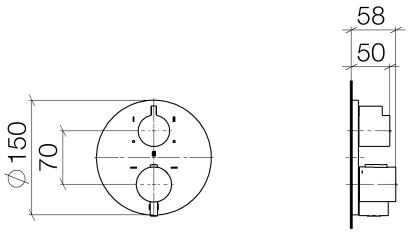

All dimensions in mm / inch = mm x 0,0394

Shower - Meta
Concealed thermostat with three-way volume control - polished chrome
Article number: 36 428 970-00 0010

Shower - Meta
Concealed thermostat with three-way volume control - polished chrome
Article number: 36 428 970-00 0010

Other surface finishes

platinum matte

36 428 970-06 0010

platinum

36 428 970-08 0010

Brushed Durabrass

36 428 970-28 0010

black matte

36 428 970-33 0010

Dark Platinum matte

36 428 970-99 0010

More custom finish options are available via special production (xTra Service). Please see our finish matrix for availability and pricing or contact a Dornbracht representative.

Required article

35 428 970-90 0010

Concealed thermostat with integrated supply stops -

Shower - Meta
Concealed thermostat with three-way volume control - polished chrome
Article number: 36 428 970-00 0010

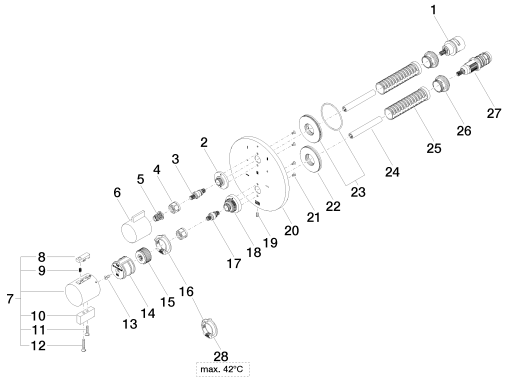

Spare parts list

Number	Item Number	Designation	Number of units
1	90 90 03 168 00 90	diverter	1
2	09 12 12 053-00	base	1
3	04 29 06 111 00-00	spindle	1
4	09 23 30 023 90	nut	2
5	09 12 12 002 90	fixing cap	1
6	09 20 67 006-00	handle	1
7	04 17 33 006 00-00	handle	1
8	09 21 33 010-00	handle	1
9	09 16 02 027 90	spring	1
10	09 20 33 006-00	handle	1
11	09 30 30 159-00	screw	1
12	09 30 30 160-00	screw	1
13	09 30 30 124 90	screw	1
14	09 12 12 052 90	base	1
15	09 12 12 054 90	base	1
16	09 28 10 152 90	regulator	1
17	04 29 06 024 00-00	spindle	1
18	09 12 12 051-00	base	1
19	09 31 11 134 90	pin	1
20	09 11 02 270-00	plate	1
21	09 30 30 157 90	screw	4
22	09 30 01 188 90	disc	1
23	90 30 01 190 00 90	disc	1
24	09 23 01 124 90	sleeve	2
25	09 18 40 077 90	sleeve	2
26	09 24 04 257 90	nut	2
27	90 15 02 012 00 90	cartridge	1
28	09 28 10 151 90	regulator	1

Shower - Concealed rough parts
Concealed thermostat with integrated supply stops -
Article number: 35 428 970-90 0010

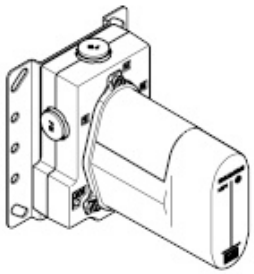

- integrated stop
- lead free compliant
- 2x back flow preventer
- 2x Connection 1/2" IT (cold/warm), DN 15
- 3x outlet 1/2"
- Mud guard
- Water protection
- Noise and heat insulation
- Center to center 2-3/4"
- Wall elbow 1/2" (concealed rough parts) Also compatible with xGrid
- Only for combination with exposed trim parts 36 428 SSS-FF

Dimensional drawing

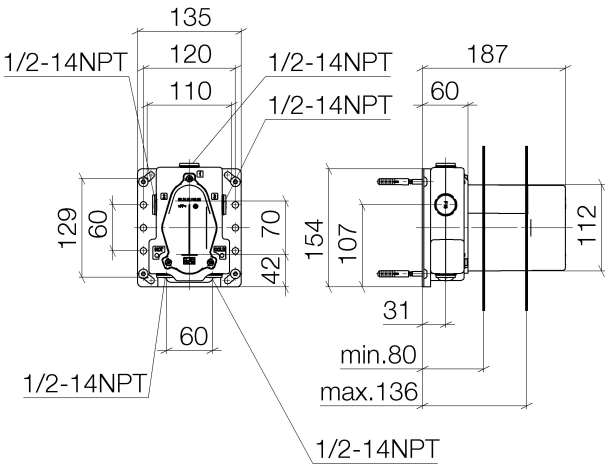

All dimensions in mm / inch = mm x 0,0394

Shower - Concealed rough parts
Concealed thermostat with integrated supply stops -
Article number: 35 428 970-90 0010

Flow rate chart

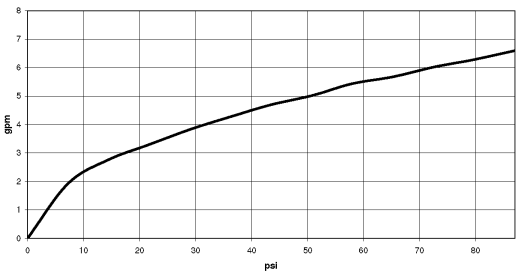

Shower - Concealed rough parts
Concealed thermostat with integrated supply stops -
Article number: 35 428 970-90 0010

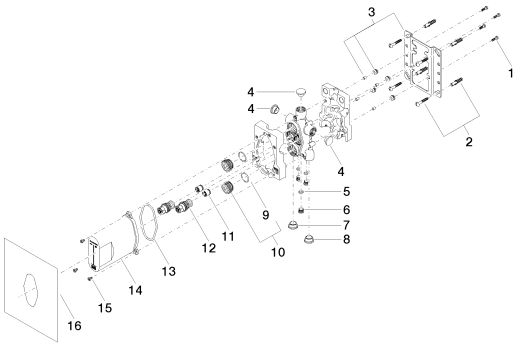

Spare parts list

Number	Item Number	Designation	Number of units
1	09 30 30 171 90	screw	4
2	04 30 31 024 01 90	fixing set	2
3	04 17 20 127 00 90	holder	1
4	09 31 20 092 90	plug	3
5	09 14 10 139 90	seal	2
6	09 31 20 039 10 90	plug	2
7	09 31 20 093 90	plug	2
8	09 31 20 094 90	plug	2
9	09 14 10 112 90	seal	2
10	04 30 11 149 00 90	plug	2
11	09 23 01 040 90	back-flow preventer	2
12	04 29 05 031 01 90	insert	2
13	09 14 10 512 90	seal	1
14	04 21 02 146 00 90	cap	1
15	09 30 30 112 90	screw	3
16	04 14 03 080 00 90	gasket kit	1

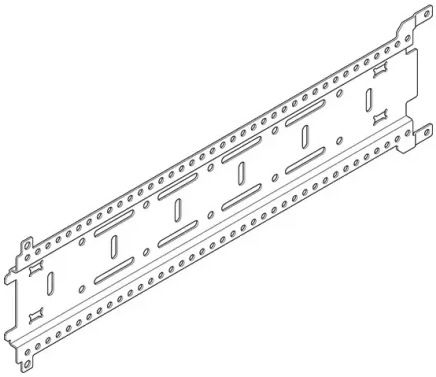

SKU: 1236097090

Dornbracht

Specifications Currently Unavailable