Rain shower wall-mounted 8-5/8" - Chrome

IMO

28 649 670

mm [inches]

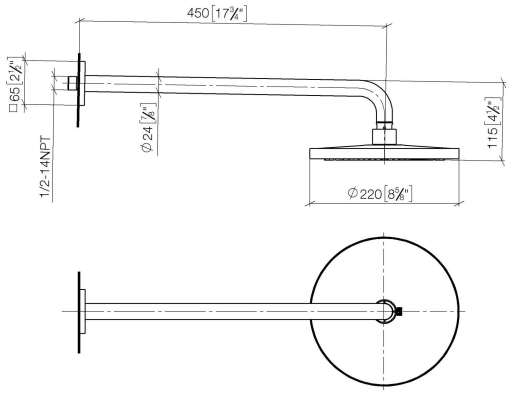

Flow rate chart

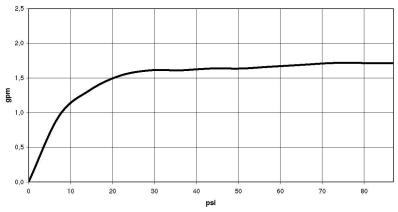

Codes & Standards

ASME A112.18.1/CSA B125.1	California Energy Commission (CEC)

Bathtub - Concealed rough parts
Concealed wall elbow -
Article number: 35 085 970-90 0010

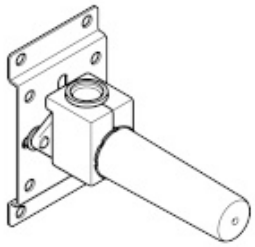

- brass, lead free
- female thread 1/2" connection
- 1x outlet 1/2"
- Mud guard
- Water protection
- Sound insulation

Discontinued items available to order until 31.12.9999

Dimensional drawing

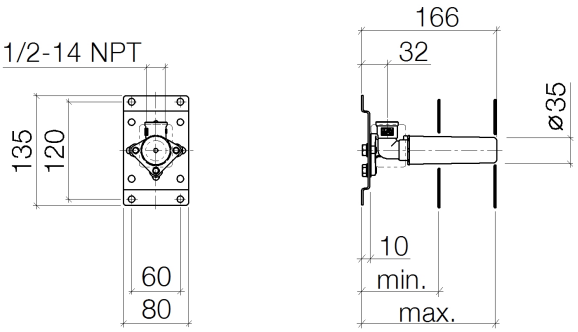

	min	max
CL.1	90	163
Deque	90	163
Domicil	90	163
Gentle	90	163
IMO	90	163
Lissé	90	163
MEM	90	163
Symetrics	90	163
Vaia	90	163

All dimensions in mm / inch = mm x 0,0394

Bathtub - Concealed rough parts
Concealed wall elbow -
Article number: 35 085 970-90 0010

Other surface finishes

More custom finish options are available via special production (xTra Service). Please see our finish matrix for availability and pricing or contact a Dornbracht representative.

Bathtub - Concealed rough parts
Concealed wall elbow -
Article number: 35 085 970-90 0010

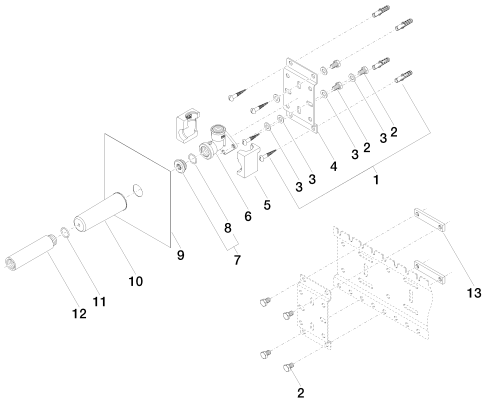

Spare parts list

Number	Item Number	Designation	Number of units
1	04 30 31 024 01 90	fixing set	2
2	09 30 30 152 90	screw	7
3	09 30 11 139 90	disc	6
4	09 17 20 094 90	holder	1
5	09 11 11 036 90	accessories	1
6	09 11 03 042 10 90	connection	1
7	04 31 20 006 00 90	plug	1
8	04 14 03 072 00 90	gasket kit	1
9	09 21 02 102 90	cap	1
10	09 14 10 010 90	seal	1
11	09 24 03 169 10 90	adaptor	1
12	09 17 20 100 90	holder	2

Symetrics WaterSheet stream outlet for wall assembly, 1/2"

Article number: 13415979

Product specifications

- **5 7/8" projection**
- Cover plate 9 1/2" x 2 3/8"
- 1/2" connection

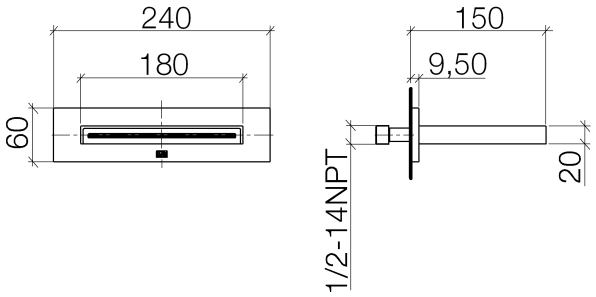

Surfaces

• chrome	13415979-00
• matt platinum	13415979-06

ALOYS F. DORNBRACHT GMBH & CO KG ARMATURENFABRIK KÖBBINGSER MÜHLE 6 58640 ISERLOHN
TEL. +49(0)2371 433-0 FAX +49(0)2371 433-232 E-MAIL: MAIL@DORNBRACHT.DE WEB: WWW.DORNBRACHT.COM

Exploded assembly drawing

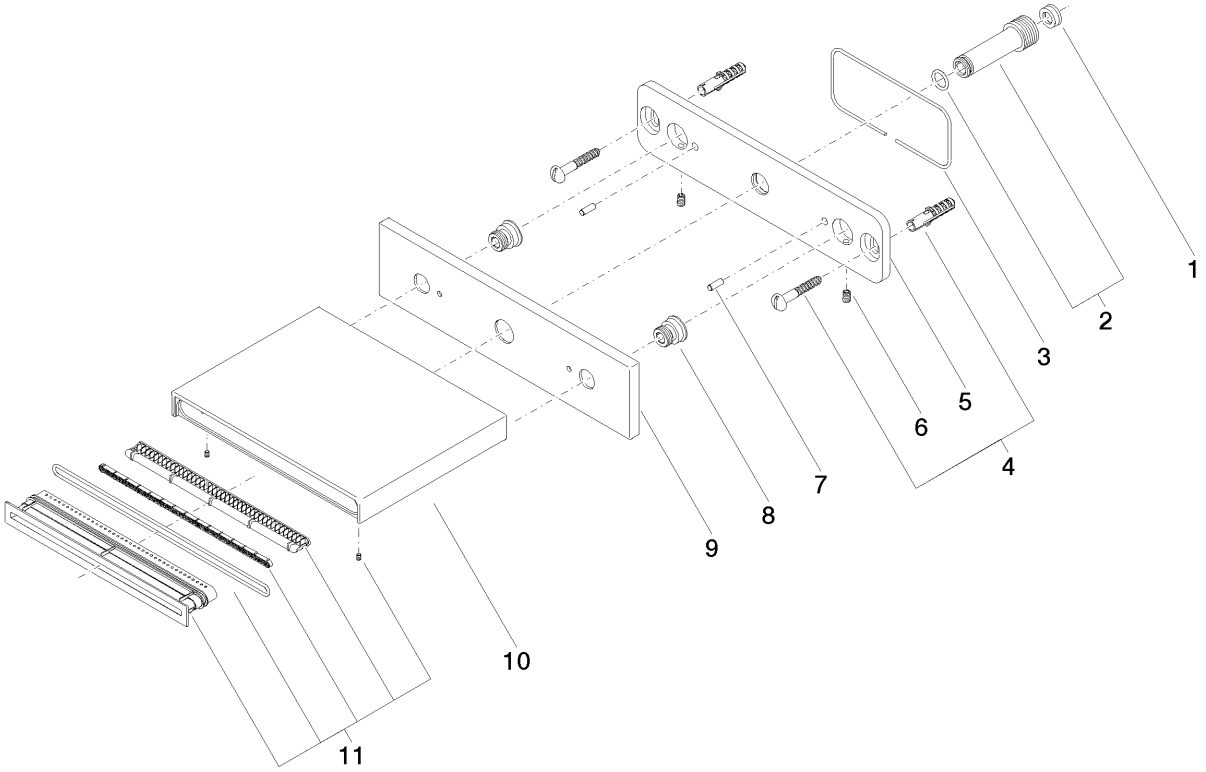

ALOYS F. DORNBRACHT GMBH & CO KG ARMATURENFABRIK KÖBBINGSER MÜHLE 6 58640 ISERLOHN
TEL. +49(0)2371 433-0 FAX +49(0)2371 433-232 E-MAIL: MAIL@DORNBRACHT.DE WEB: WWW.DORNBRACHT.COM

Order quantity

No.	Article number	Name	Installation quantity
1	09230105790	flow reducer	1
2	9024032130090	connection	1
3	09140313490	seal	1
4	0430310240190	fixing set	1
5	09179705990	holder	1
6	09311103690	pin	2
7	09311104090	pin	2
8	09240321490	nipple	2
9	092778031ff	rosette	1
10	091178003ff	spout	1
11	9029030590090	insert	1

ALOYS F. DORNBRACHT GMBH & CO KG ARMATURENFABRIK KÖBBINGSER MÜHLE 6 58640 ISERLOHN
TEL. +49(0)2371 433-0 FAX +49(0)2371 433-232 E-MAIL: MAIL@DORNBRACHT.DE WEB: WWW.DORNBRACHT.COM

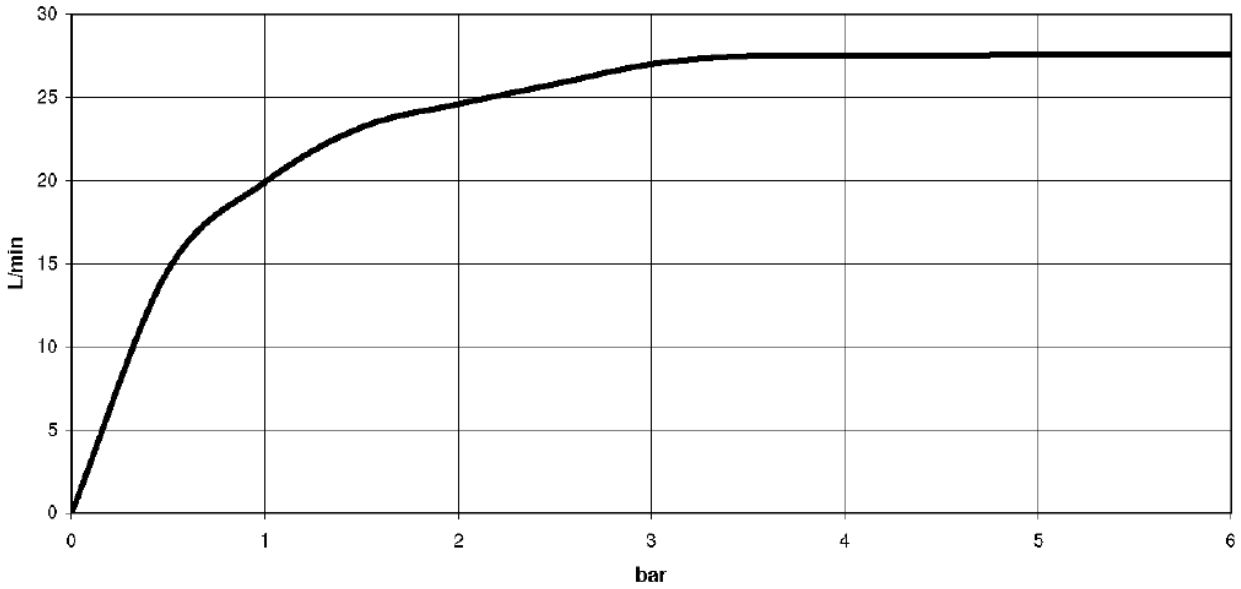

ALOYS F. DORNBRACHT GMBH & CO KG ARMATURENFABRIK KÖBBINGSER MÜHLE 6 58640 ISERLOHN
TEL. +49(0)2371 433-0 FAX +49(0)2371 433-232 E-MAIL: MAIL@DORNBRACHT.DE WEB: WWW.DORNBRACHT.COM

Bathtub - Concealed rough parts
Rough-in adapter -
Article number: 35 080 970-90 0010

- 1/2" male NPT x 1/2" female straight

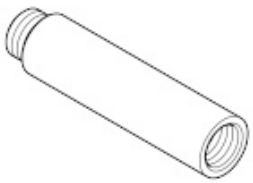

Dimensional drawing

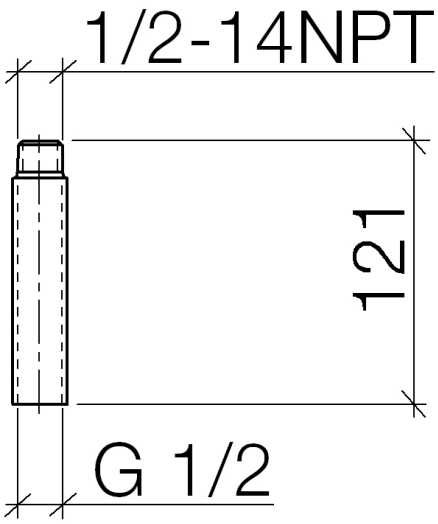

All dimensions in mm / inch = mm x 0,0394

Bathtub - Concealed rough parts
Rough-in adapter -
Article number: 35 080 970-90 0010

Bathtub - Concealed rough parts
Rough-in adapter -
Article number: 35 080 970-90 0010

Spare parts list

Number	Item Number	Designation	Number of units

Symetrics Hand shower set with individual flanges

Article number: 27808980

Product specifications

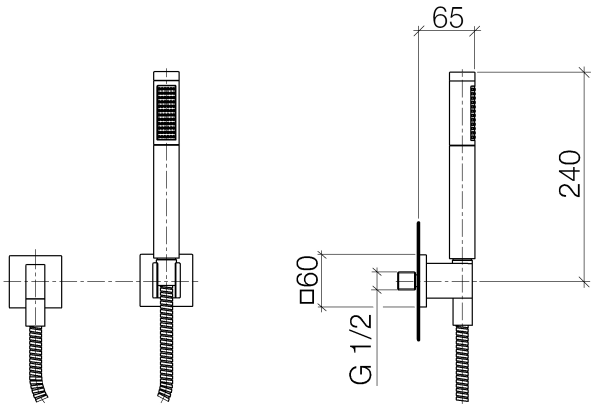

- Hand shower with descaling system and back flow preventer
- 3/8" shower outlet
- Hand shower bracket
- Flange 2 3/8 x 2 3/8"
- 3/8" x 1/2" x 49 1/4" shower hose with rotating hose connector
- 1/2" wall elbow with back flow preventer
- Total height 9 1/2"
- Water flow rate limited to max. 2 gpm

Internal backflow preventer.

Surfaces

• chrome	27808980-00
• matt platinum	27808980-06

ALOYS F. DORNBRACHT GMBH & CO KG ARMATURENFABRIK KÖBBINGSER MÜHLE 6 58640 ISERLOHN
TEL. +49(0)2371 433-0 FAX +49(0)2371 433-232 E-MAIL: MAIL@DORNBRACHT.DE WEB: WWW.DORNBRACHT.COM

Exploded assembly drawing

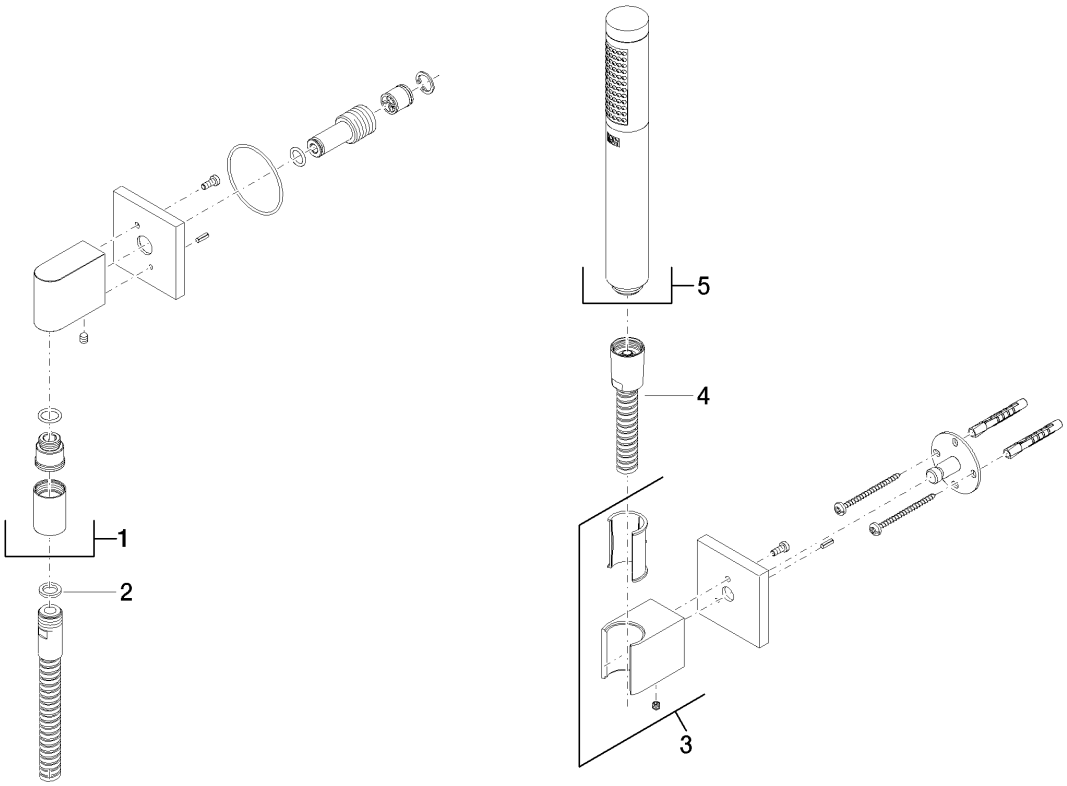

ALOYS F. DORNBRACHT GMBH & CO KG ARMATURENFABRIK KÖBBINGSER MÜHLE 6 58640 ISERLOHN
TEL. +49(0)2371 433-0 FAX +49(0)2371 433-232 E-MAIL: MAIL@DORNBRACHT.DE WEB: WWW.DORNBRACHT.COM

Order quantity

No.	Article number	Name	Installation quantity
1	28450980ff	connection	1
2	09142002690	seal	1
3	28050980ff	holder	1
4	093002072ff	hose	1
5	28010979ff	shower	1

ALOYS F. DORNBRACHT GMBH & CO KG ARMATURENFABRIK KÖBBINGSER MÜHLE 6 58640 ISERLOHN
TEL. +49(0)2371 433-0 FAX +49(0)2371 433-232 E-MAIL: MAIL@DORNBRACHT.DE WEB: WWW.DORNBRACHT.COM

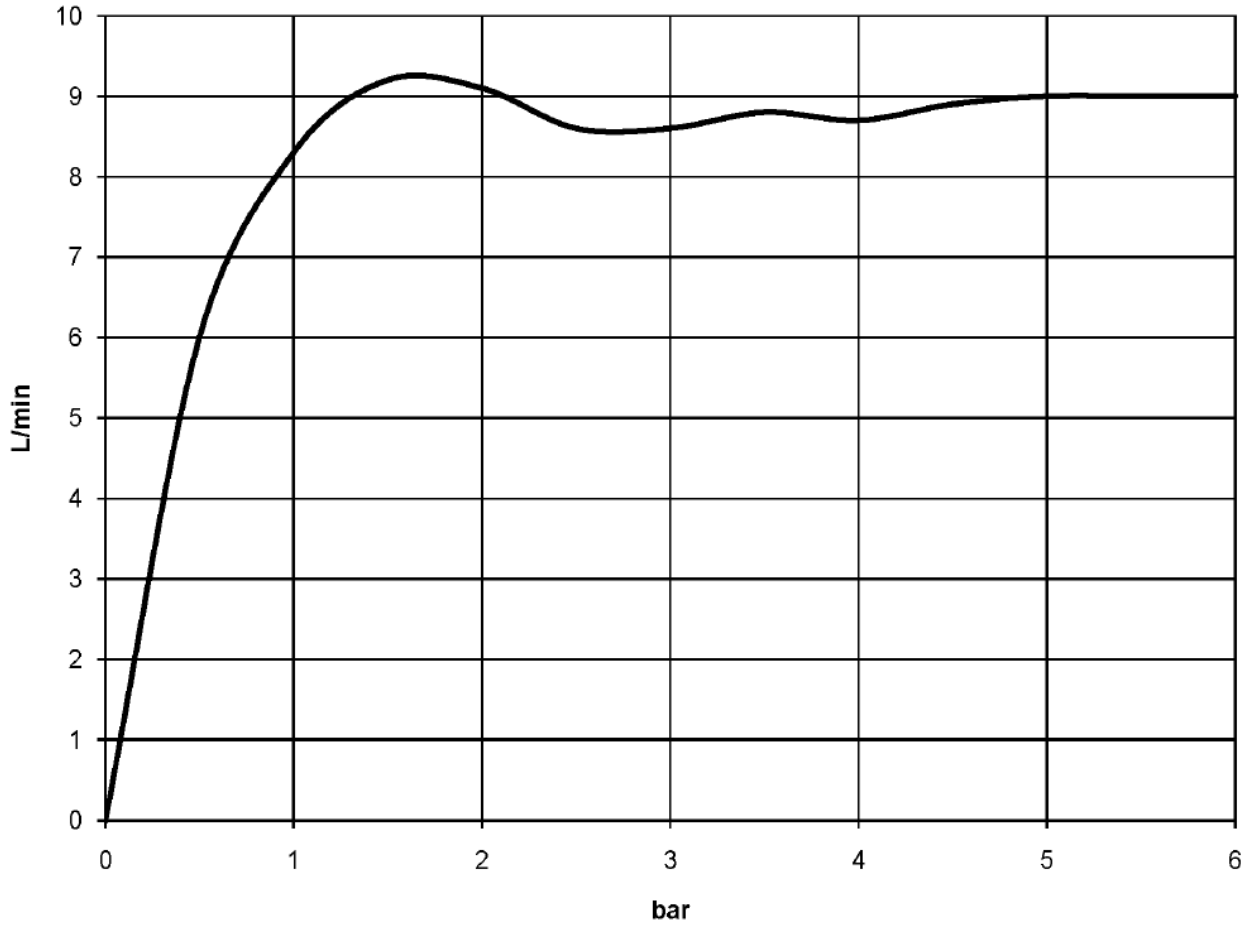

ALOYS F. DORNBRACHT GMBH & CO KG ARMATURENFABRIK KÖBBINGSER MÜHLE 6 58640 ISERLOHN
TEL. +49(0)2371 433-0 FAX +49(0)2371 433-232 E-MAIL: MAIL@DORNBRACHT.DE WEB: WWW.DORNBRACHT.COM

Bath & Spa
MEM xTool thermostat without volume regulation
Article number: 36416780

Product specifications

Exposed trim parts only, rough to be ordered separately

- Flange 4 3/4 x 4 3/4"
- Temperature control handle with safety lock 100.4 °F

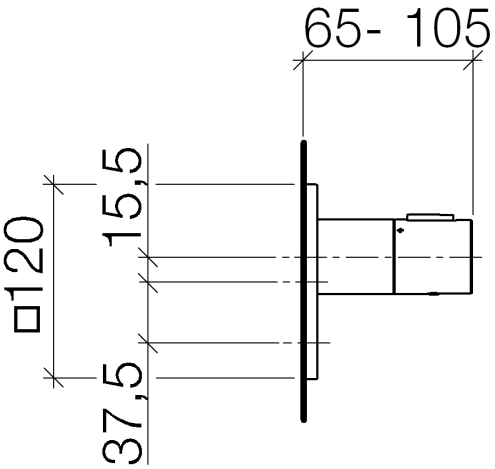

Surfaces

• chrome	36416780-00
• matt platinum	36416780-06
• platinum	36416780-08

Accessories required

- Rough for xTool thermostat without volume control; 35517970

ALOYS F. DORNBRACHT GMBH & CO KG ARMATURENFABRIK KÖBBINGSER MÜHLE 6 58640 ISERLOHN
TEL. +49(0)2371 433-0 FAX +49(0)2371 433-232 E-MAIL: MAIL@DORNBRACHT.DE WEB: WWW.DORNBRACHT.COM

Exploded assembly drawing

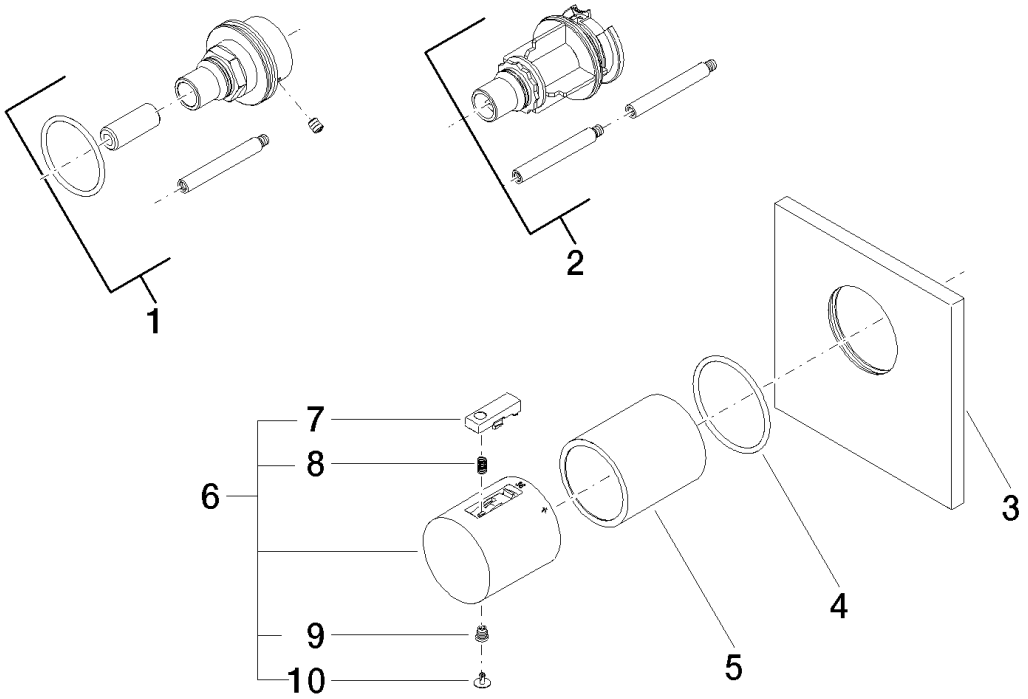

ALOYS F. DORNBRACHT GMBH & CO KG ARMATURENFABRIK KÖBBINGSER MÜHLE 6 58640 ISERLOHN
TEL. +49(0)2371 433-0 FAX +49(0)2371 433-232 E-MAIL: MAIL@DORNBRACHT.DE WEB: WWW.DORNBRACHT.COM

Order quantity

No.	Article number	Name	Installation quantity
1	1217797090	Extension 28mm Thermostat xTOOL (concealed rough parts)	1
2	1217897090	extension	1
3	091102196ff	cover	1
4	09141004990	seal	1
5	092102112ff	sleeve	1
6	04173300401ff	handle	1
7	092133010ff	handle	1
8	09160202790	spring	1
9	09303013690	screw	1
10	093120049ff	plug	1

ALOYS F. DORNBRACHT GMBH & CO KG ARMATURENFABRIK KÖBBINGSER MÜHLE 6 58640 ISERLOHN
TEL. +49(0)2371 433-0 FAX +49(0)2371 433-232 E-MAIL: MAIL@DORNBRACHT.DE WEB: WWW.DORNBRACHT.COM

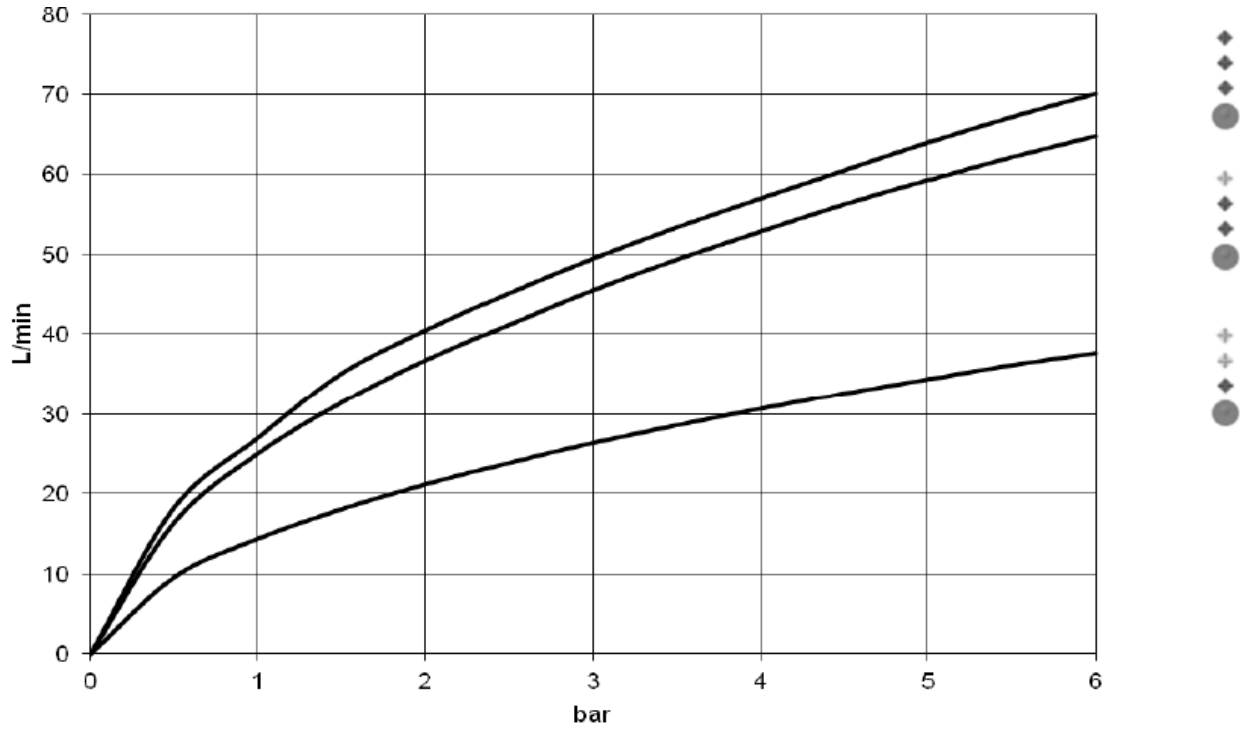

ALOYS F. DORNBRACHT GMBH & CO KG ARMATURENFABRIK KÖBBINGSER MÜHLE 6 58640 ISERLOHN
TEL. +49(0)2371 433-0 FAX +49(0)2371 433-232 E-MAIL: MAIL@DORNBRACHT.DE WEB: WWW.DORNBRACHT.COM

mm [inches]

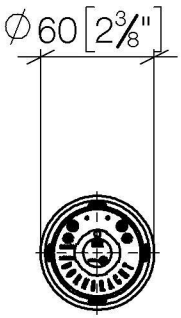

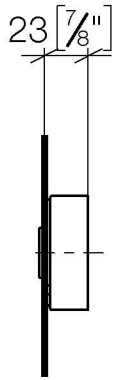

mm [inches]

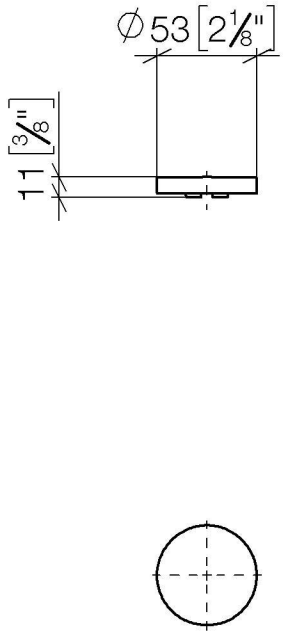

Shower - FM products
xTOOL Concealed thermostat rough with three volume controls -
: 35 547 970-90 0010

- 2x Shaft and sleeve can be cut to length
- 2x back flow preventer
- 2x Water protection
- 3x Mud guard
- 1/2" connection
- brass, lead free
- Sound insulation
- Center to center 4-3/4"
- Thermostat cartridge
- Integrated supply stops
- 2x connections 3/4" (hot/cold)
- NOTE: Important for certain series! Due to minimum rough-in requirements, a framing of 2x6 studs is needed.

Dimensional drawing

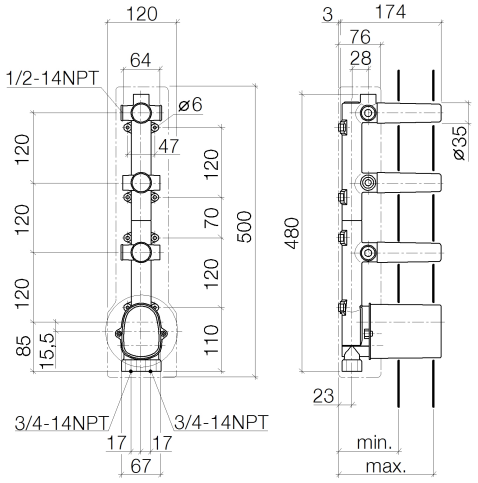

Source	min 78	max 114
Circle	80	110
Lulu	80	110
Madison	80	110
Madison Flair	80	110
TARA LOGIC	80	110
Meta.02	80	110
Soul	80	110
Square	80	110
Cult	80	110
L'Aura	80	110
Domicil	85	110
Just	80	155
LaFleur	95	160
SUPERNOVA	95	160
Symetrica	95	160
DEQUE	95	160
Tara.	95	160
MEM	115	156
CL.1	115	156

Shower - FM products
xTOOL Concealed thermostat rough with three volume controls -
: 35 547 970-90 0010

Recommended article

12 177 970 90
Extension 1-1/8" -

12 178 970 90
Extension 1-3/4" -