SKU: 28677404

Dornbracht

Specifications Currently Unavailable

Bathtub - Concealed rough parts
Concealed wall elbow -
Article number: 35 085 970-90 0010

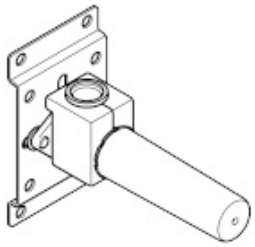

- brass, lead free
- female thread 1/2" connection
- 1x outlet 1/2"
- Mud guard
- Water protection
- Sound insulation

Discontinued items available to order until 31.12.9999

Dimensional drawing

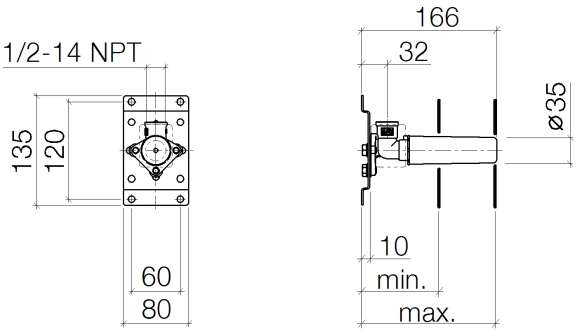

	min	max
CL.1	90	163
Deque	90	163
Domicil	90	163
Gentle	90	163
IMO	90	163
Lissé	90	163
MEM	90	163
Symetrics	90	163
Vaia	90	163

All dimensions in mm / inch = mm x 0,0394

Bathtub - Concealed rough parts
Concealed wall elbow -
Article number: 35 085 970-90 0010

Other surface finishes

More custom finish options are available via special production (xTra Service). Please see our finish matrix for availability and pricing or contact a Dornbracht representative.

Bathtub - Concealed rough parts
Concealed wall elbow -
Article number: 35 085 970-90 0010

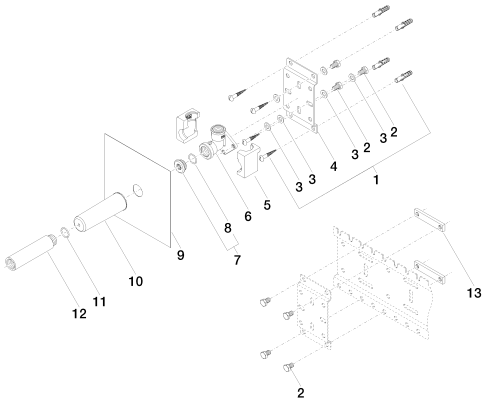

Spare parts list

Number	Item Number	Designation	Number of units
1	04 30 31 024 01 90	fixing set	2
2	09 30 30 152 90	screw	7
3	09 30 11 139 90	disc	6
4	09 17 20 094 90	holder	1
5	09 11 11 036 90	accessories	1
6	09 11 03 042 10 90	connection	1
7	04 31 20 006 00 90	plug	1
8	04 14 03 072 00 90	gasket kit	1
9	09 21 02 102 90	cap	1
10	09 14 10 010 90	seal	1
11	09 24 03 169 10 90	adaptor	1
12	09 17 20 100 90	holder	2

SKU: 27808404

Dornbracht

Specifications Currently Unavailable

Bathtub - Concealed rough parts
Rough-in adapter -
Article number: 35 080 970-90 0010

- 1/2" male NPT x 1/2" female straight

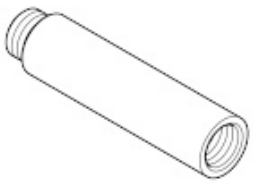

Dimensional drawing

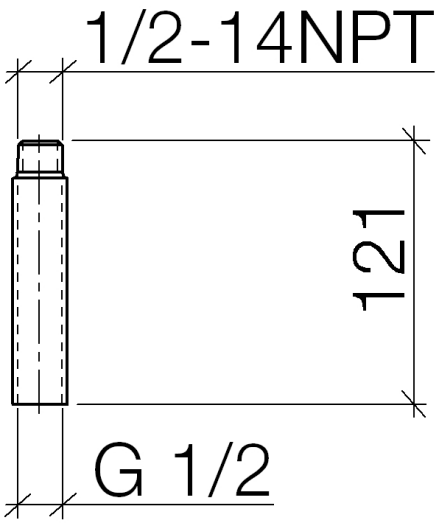

All dimensions in mm / inch = mm x 0,0394

Bathtub - Concealed rough parts
Rough-in adapter -
Article number: 35 080 970-90 0010

Bathtub - Concealed rough parts
Rough-in adapter -
Article number: 35 080 970-90 0010

Spare parts list

Number	Item Number	Designation	Number of units

SKU: 36416404

Dornbracht

Specifications Currently Unavailable

SKU: 36310404

Dornbracht

Specifications Currently Unavailable

Bathtub - Concealed rough parts
xTOOL Concealed thermostat rough with two volume controls 3/4" -
Article number: 35 521 970-90 0010

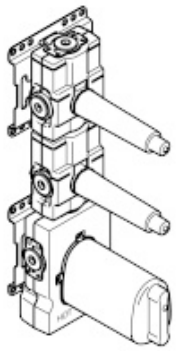

- brass, lead free
- 2x back flow preventer
- 2x Connection 3/4" IT (cold/warm), DN 15
- 2x female thread 3/4" outlet for additional valves
- 2x female thread 3/4" outlet, right/left alternatively
- 3x Mud guard
- 3x Water protection
- Sound insulation
- Integrated supply stops
- Center to center 4-3/4"
- Wall elbow 1/2" (concealed rough parts) Also compatible with xGrid

Dimensional drawing

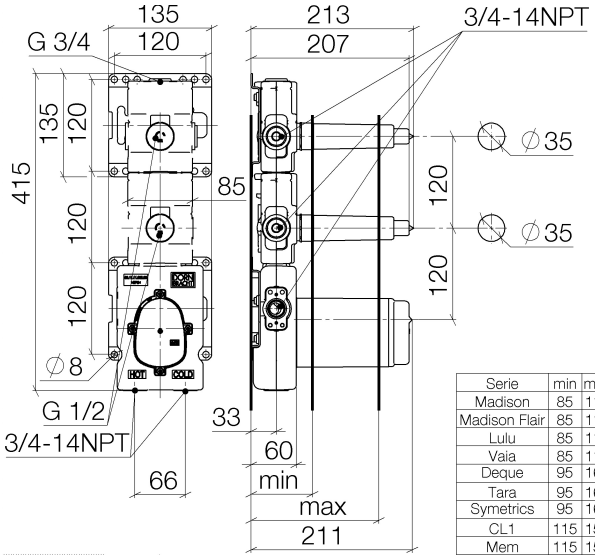

Serie	min	max
Madison	85	110
Madison Flair	85	110
Lulu	85	110
Vaia	85	110
Deque	95	160
Tara	95	160
Symetrics	95	160
CL1	115	155
Mem	115	155

All dimensions in mm / inch = mm x 0,0394

Model/program/technical modifications and error excepted
For more information see: www.dornbracht.com + 49 (0) 2371 433-460 mail@dornbrachtgroup.de

Bathtub - Concealed rough parts
xTOOL Concealed thermostat rough with two volume controls 3/4" -
Article number: 35 521 970-90 0010

Flow rate chart

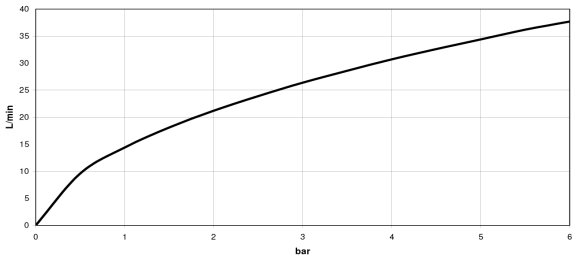

Bathtub - Concealed rough parts
xTOOL Concealed thermostat rough with two volume controls 3/4" -
Article number: 35 521 970-90 0010

Recommended article

12 177 970 90
Extension 1-1/8" -

12 178 970 90
Extension 1-3/4" -

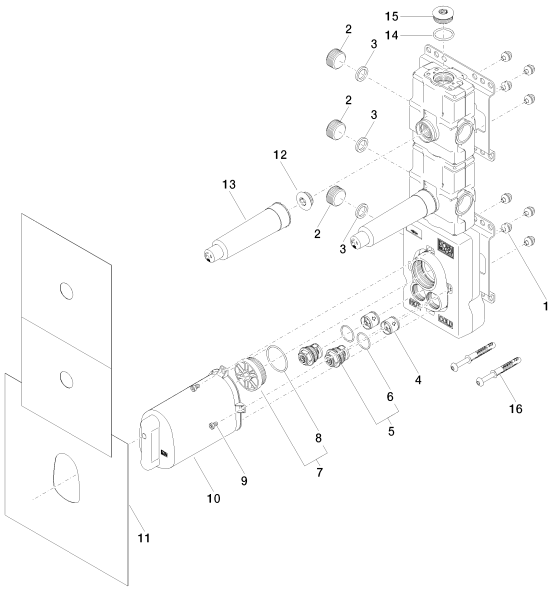

Spare parts list

Number	Item Number	Designation	Number of units
1	90 23 01 091 00 90	set	8
2	09 30 20 118 90	plug	3
3	09 14 05 002 90	seal	3
4	09 23 01 045 90	back-flow preventer	2
5	04 29 05 031 00 90	insert	2
6	09 14 10 098 90	seal	2
7	04 31 20 100 00 90	plug	1
8	09 14 10 111 90	seal	1
9	09 30 30 112 90	screw	4
10	04 21 02 174 00 90	cap	1
11	04 14 03 073 02 90	gasket kit	1
12	04 31 20 006 00 90	plug	2
13	09 21 02 173 90	cap	2
14	09 14 10 009 90	seal	1
15	09 31 20 003 90	plug	1
16	04 30 31 054 00 90	fixing set	2