SKU: 28508404

Dornbracht

Specifications Currently Unavailable

Bathtub - Concealed rough parts
Rough-in adapter -
Article number: 35 080 970-90 0010

- 1/2" male NPT x 1/2" female straight

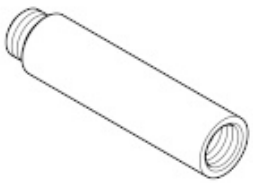

Dimensional drawing

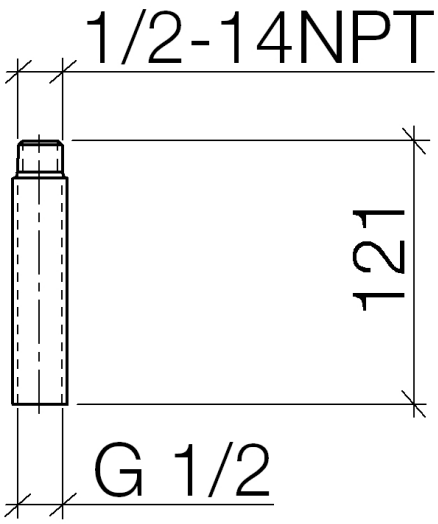

All dimensions in mm / inch = mm x 0,0394

Bathtub - Concealed rough parts
Rough-in adapter -
Article number: 35 080 970-90 0010

Bathtub - Concealed rough parts
Rough-in adapter -
Article number: 35 080 970-90 0010

Spare parts list

Number	Item Number	Designation	Number of units

SKU: 27808404

Dornbracht

Specifications Currently Unavailable

SKU: 36426404

Dornbracht

Specifications Currently Unavailable

Shower - Concealed rough parts
Concealed thermostat with integrated supply stops -
Article number: 35 426 970-90 0010

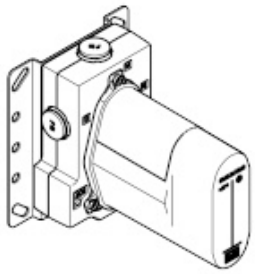

- integrated stop
- lead free compliant
- 2x back flow preventer
- 2x Connection 1/2" IT (cold/warm), DN 15
- 3x outlet 1/2"
- Mud guard
- Water protection
- Noise and heat insulation
- Wall elbow 1/2" (concealed rough parts) Also compatible with xGrid
- Center to center 2-3/4"

Dimensional drawing

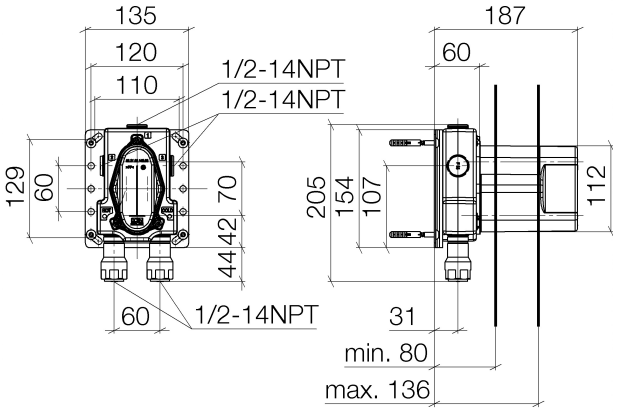

All dimensions in mm / inch = mm x 0,0394

Shower - Concealed rough parts
Concealed thermostat with integrated supply stops -
Article number: 35 426 970-90 0010

Flow rate chart

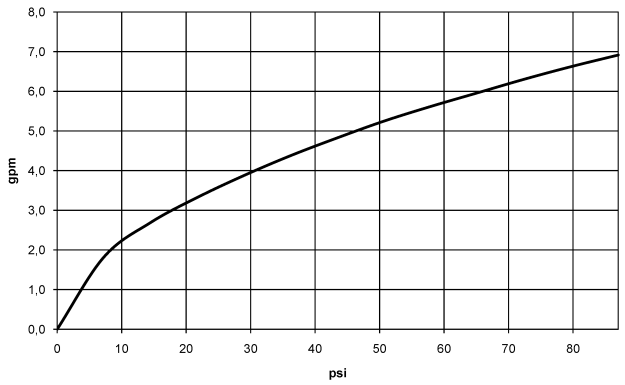

Shower - Concealed rough parts
Concealed thermostat with integrated supply stops -
Article number: 35 426 970-90 0010

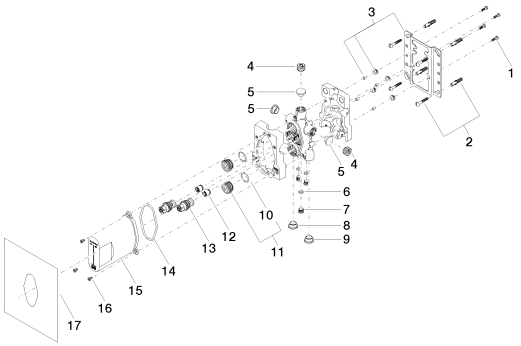

Spare parts list

Number	Item Number	Designation	Number of units
1	09 30 30 171 90	screw	4
2	04 30 31 024 01 90	fixing set	2
3	04 17 20 127 00 90	holder	1
4	09 31 20 064 90	plug	2
5	09 31 20 092 90	plug	3
6	09 14 10 139 90	seal	3
7	09 31 20 039 10 90	plug	3
8	09 31 20 093 90	plug	1
9	09 31 20 094 90	plug	1
10	09 14 10 112 90	seal	2
11	04 30 11 149 00 90	plug	2
12	09 23 01 040 90	back-flow preventer	2
13	04 29 05 031 01 90	insert	2
14	09 14 10 512 90	seal	1
15	04 21 02 146 00 90	cap	1
16	09 30 30 112 90	screw	3
17	04 14 03 080 00 90	gasket kit	1

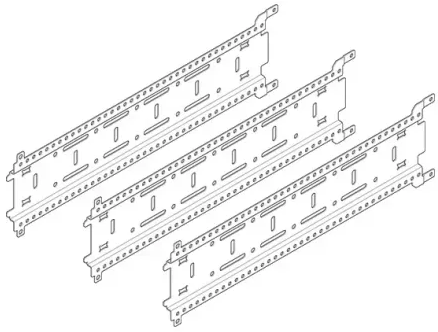

SKU: 1238097090

Dornbracht

Specifications Currently Unavailable

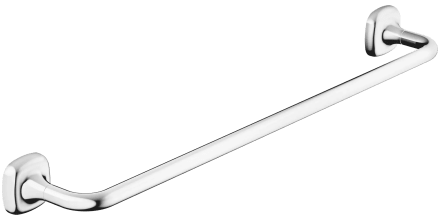

SKU: 83060404

Dornbracht

Specifications Currently Unavailable