29 426

EUROCUBE®

PRESSURE BALANCE VALVE TRIM WITH 3-WAY DIVERTER WITH CARTRIDGE

Pure Freude an Wasser

GROHE

STANDARD SPECIFICATION:

- All metal handles and trim plates to cater to the look and feel of a premium brand
- No visible screws for a clean uncluttered look
- GROHE QuickFix® fixation system provides a completely flush mounted trim with no wobble
- Easy to turn Lever Handles to meet all user needs
- Double Ceramic Cartridge for smooth, leak-free performance and improved scald protection
- Requires GrohSafe™ 3.0 Pressure Balance Rough-in Valve with Integrated Diverter (35 117) (sold separately)



PRODUCT FEATURES:

GROHE StarLight®

GROHE SilkMove®

GROHE QuickFix®

CERTIFICATIONS:

CEC

- ADA
- CEC Certified
- CALGreen Compliant
- Massachusetts Plumbing Board Approved
- ASSE 1016
- CSA B125.1
- CSA B125.16
- ASME A112.18.1
- ASME A112.1016

AVAILABLE FINISHES:

29426000	GROHE StarLight® Chrome
294262430	Matte Black
29426A00	Hard Graphite
29426EN0	Brushed Nickel InfinityFinish™
29426GN0	Brushed Cool Sunrise

NOTE: Install this product according to the installation guide. ADA, CSA compliant when installed to the specific requirements of these regulations.

We reserve the right to make revisions without notice to product specifications. 04-05-2023

US
Tel: 1.630.582.7711 Fax: 1.630.582.7722
For the most current Specification Sheet, go to www.grohe.us.

Canada
Tel: 1.888.644.7643 Fax: 1.905.366.2071
For the most current Specification Sheet, go to www.grohe.ca.

PART OF LIXIL

29 426

EUROCUBE®

PRESSURE BALANCE VALVE TRIM WITH 3-WAY DIVERTER WITH CARTRIDGE

Pure Freude an Wasser

GROHE

TECHNICAL DATA:

Product Height	**241.09 mm**
Product Length	**43.00 mm**
Product Width	**207.50 mm**

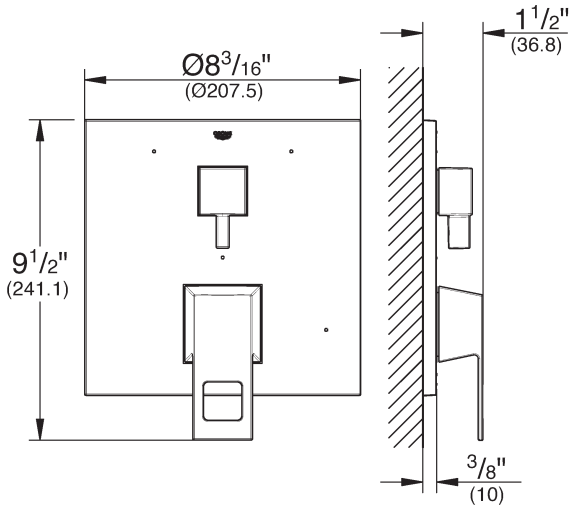

35 117

GROHSAFE™ 3.0

PRESSURE BALANCE ROUGH-IN VALVE WITH INTEGRATED DIVERTER

Pure Freude an Wasser

GROHE

STANDARD SPECIFICATION:

- Flat Back for sturdy, quick installation
- Pre-installed Flush Plug with Fixation Ring to speed up testing and flushing the lines
- Convertible Flush Plug/Test Cap to accommodate single and multiple valve installations
- Aligned Inlets & Outlets to eliminate misaligned piping and rough-in mistakes due to different rough-in depths
- 2-Way/3-Way Convertible for one valve that makes specification & installation simple
- Made of DZR Brass to provide a corrosion resistant valve that can be installed in areas of with harsh water conditions
- ½ NPT
- Flow Pressure: min 20 psi
- Recommended Flow Pressure 20 - 72.5 psi
- Greater than 72.5 psi, fit pressure reducing valve
- Max. operating pressure 125 psi
- Max. test pressure 500 psi
- Flow rate at 45 psi flow pressure: minimum 6.8 L/min or 1.8 gpm
- Max. flow rate at 45 psi flow pressure - top port: 14 L/min or 3.7 gpm, bottom port: 15 L/min or 4.0 gpm

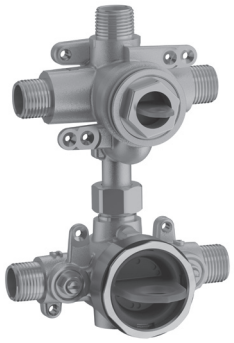

PRODUCT FEATURES:

GROHE QuickFix®

CERTIFICATIONS:

- Massachusetts Plumbing Board Approved
- ASSE 1016
- CSA B125.1
- CSA B125.16
- ASME A112.18.1
- ASME A112.1016

AVAILABLE FINISHES:

35117000 No Finish

NOTE: Install this product according to the installation guide. ADA, CSA compliant when installed to the specific requirements of these regulations.

We reserve the right to make revisions without notice to product specifications. 10-03-2023

US
Tel: 1.630.582.7711 Fax: 1.630.582.7722
For the most current Specification Sheet, go to www.grohe.us.

Canada
Tel: 1.888.644.7643 Fax: 1.905.366.2071
For the most current Specification Sheet, go to www.grohe.ca.

PART OF LIXIL

35 117

GROHSAFE™ 3.0

PRESSURE BALANCE ROUGH-IN VALVE WITH INTEGRATED DIVERTER

Pure Freude an Wasser

GROHE

TECHNICAL DATA:

Product Height	**177 mm**
Product Length	**95 mm**
Product Width	**123 mm**

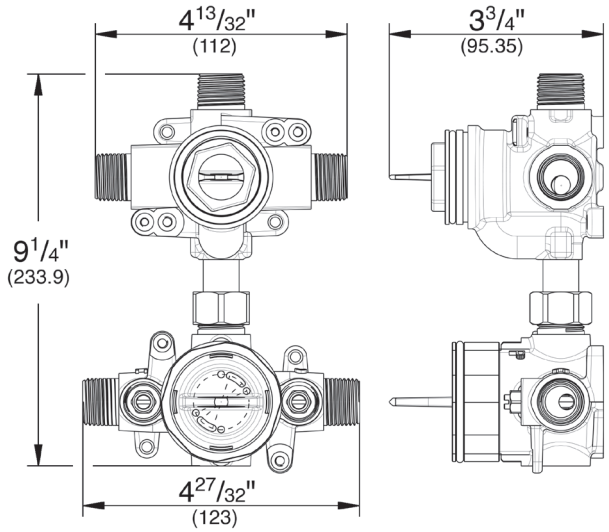

26 570

RAINSHOWER™

310 MONO SHOWER HEAD, 12″ - 1 SPRAY

Pure Freude an Wasser

GROHE

STANDARD SPECIFICATION:



- GROHE StarLight®
- GROHE DreamSpray®
- GROHE EcoJoy®
- GROHE SpeedClean®
- 1 Spray: GROHE PureRain
- 12″ Face
- Ball joint angle adjustable ±10°
- ½″ NPT Connection
- Recommended Rainshower™ arm: (26 632) (sold separately)
- Max. flow rate: 1.75gpm (6.6L/min)

PRODUCT FEATURES:

GROHE StarLight®

GROHE DreamSpray®

GROHE EcoJoy™

Speed Clean®

CERTIFICATIONS:

CEC

- WaterSense
- CEC Certified
- CALGreen Compliant
- Massachusetts Plumbing Board Approved
- Energy Policy Act of 1992
- CSA B125.1
- ASME A112.18.1

AVAILABLE FINISHES:

26570000	GROHE StarLight® Chrome
265702430	Matte Black
26570A00	Hard Graphite
26570EN0	Brushed Nickel InfinityFinish™
26570GN0	Brushed Cool Sunrise

NOTE: Install this product according to the installation guide. ADA, CSA compliant when installed to the specific requirements of these regulations.

We reserve the right to make revisions without notice to product specifications. 04-05-2023

US
Tel: 1.630.582.7711 Fax: 1.630.582.7722
For the most current Specification Sheet, go to www.grohe.us.

Canada
Tel: 1.888.644.7643 Fax: 1.905.366.2071
For the most current Specification Sheet, go to www.grohe.ca.

PART OF LIXIL

26 570

RAINSHOWER™

310 MONO SHOWER HEAD, 12″ - 1 SPRAY

Pure Freude an Wasser

GROHE

TECHNICAL DATA:

Product Height	**226 mm**
Product Length	**310 mm**
Product Width	**310 mm**
GPM (Min)-GPM (Max)	**1.75 gal (US)/min**

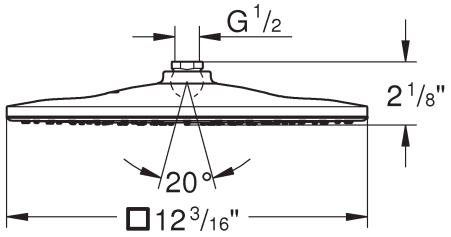

26632

RAINSHOWER

RAINSHOWER 15″ SQUARE SHOWER ARM

GROHE SPA

STANDARD SPECIFICATION:

- GROHE LongLife finish
- ½″ NPT male threads
- 15″ Shower Arm with Square Flange
- Can be used with any shower head EXCEPT Rainshower Jumbo (28 783)



AVAILABLE FINISHES:

26632000	GROHE StarLight Chrome
266322430	Matte Black
26632A00	Hard Graphite
26632AL0	Brushed Hard Graphite
26632DL0	Brushed Warm Sunset
26632EN0	Brushed Nickel InfinityFinish
26632GN0	Brushed Cool Sunrise

CERTIFICATIONS:

- CSA B125.1
- ASME A112.18.1

PRODUCT FEATURES:

NOTE: Install this product according to the installation guide. ADA, CSA compliant when installed to the specific requirements of these regulations.

We reserve the right to make revisions without notice to product specifications. 10-16-2025

US
Tel: 1.630.582.7711 Fax: 1.630.582.7722
For the most current Specification Sheet, go to www.grohe.us.

Canada
Tel: 1.888.644.7643 Fax: 1.905.366.2071
For the most current Specification Sheet, go to www.grohe.ca.

PART OF LIXIL

26632

RAINSHOWER

GROHE SPA

RAINSHOWER 15″ SQUARE SHOWER ARM

TECHNICAL DATA:

Product Height	85 mm
Product Length	15 in
Product Width	65 mm

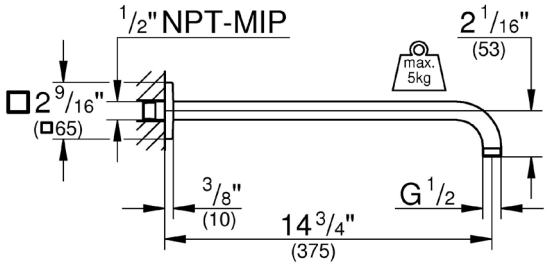

27892
EUPHORIA CUBE+
24″ SHOWER SLIDE BAR

GROHE SPA

STANDARD SPECIFICATION:

- GROHE LongLife finish
- Adjustable angle of hand shower
- Adjustable height



AVAILABLE FINISHES:

27892000	GROHE StarLight Chrome
278922430	Matte Black
27892A00	Hard Graphite
27892AL0	Brushed Hard Graphite
27892DL0	Brushed Warm Sunset
27892EN0	Brushed Nickel InfinityFinish
27892GN0	Brushed Cool Sunrise

CERTIFICATIONS:

- ADA
- No
- CSA B125.1
- ASME A112.18.1

PRODUCT FEATURES:

NOTE: Install this product according to the installation guide. ADA, CSA compliant when installed to the specific requirements of these regulations.

We reserve the right to make revisions without notice to product specifications. 10-14-2025

US
Tel: 1.630.582.7711 Fax: 1.630.582.7722
For the most current Specification Sheet, go to www.grohe.us.

Canada
Tel: 1.888.644.7643 Fax: 1.905.366.2071
For the most current Specification Sheet, go to www.grohe.ca.

PART OF LIXIL

27892

EUPHORIA CUBE+

24″ SHOWER SLIDE BAR

GROHE SPA

TECHNICAL DATA:

Product Height	620 mm
Product Length	73 mm

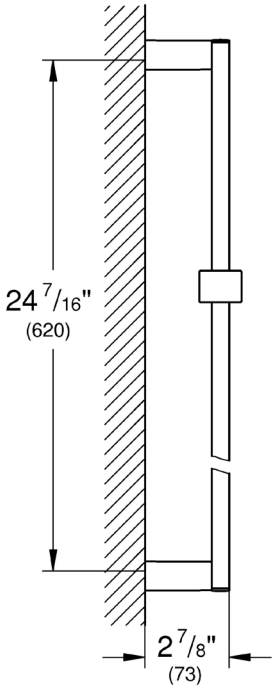

26994
UNIVERSAL
59″ METAL SHOWER HOSE

GROHE SPA

STANDARD SPECIFICATION:

- GROHE LongLife finish
- 59″ Long
- Metal hose
- Tensile strength 500 N
- Pressure resistance: up to 14.5psi (16 bar)
- Heat resistance 165°F
- AntiFold bend proof
- ½″ NPT female threads
- Rotation cone for Twist-free function
- Silicone strip prevents hand shower from turning while in body spray position



AVAILABLE FINISHES:

26994000	GROHE StarLight Chrome
269942430	Matte Black
26994A00	Hard Graphite
26994AL0	Brushed Hard Graphite
26994DL0	Brushed Warm Sunset
26994EN0	Brushed Nickel InfinityFinish
26994GN0	Brushed Cool Sunrise

CERTIFICATIONS:

- ADA
- CSA B125.1
- ASME A112.18.1

PRODUCT FEATURES:

NOTE: Install this product according to the installation guide. ADA, CSA compliant when installed to the specific requirements of these regulations.

We reserve the right to make revisions without notice to product specifications. 10-14-2025

US
Tel: 1.630.582.7711 Fax: 1.630.582.7722
For the most current Specification Sheet, go to www.grohe.us.

Canada
Tel: 1.888.644.7643 Fax: 1.905.366.2071
For the most current Specification Sheet, go to www.grohe.ca.

PART OF LIXIL

26994
UNIVERSAL
59″ METAL SHOWER HOSE

GROHE SPA

TECHNICAL DATA:

Product Height	23 mm
Product Length	1,500 mm
Product Width	23 mm

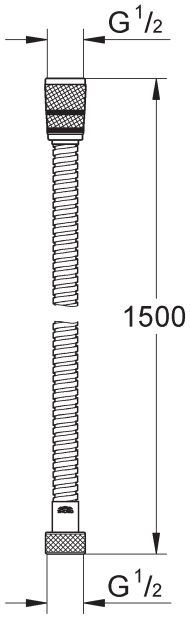

26867

EUPHORIA CUBE+

EUPHORIA CUBE+ STICK HAND SHOWER - 1 SPRAY, 1.75 GPM (6.6 L/MIN)

GROHE SPA

STANDARD SPECIFICATION:

- GROHE LongLife finish
- GROHE DreamSpray
- GROHE AquaCalibrator
- Speed Clean anti-lime system
- 1 Spray: Non-adjustable normal spray
- Metal hand shower
- Max. flow rate: 1.75gpm (6.6L/min)



AVAILABLE FINISHES:

26867000	Chrome
268672430	Matte Black
26867A00	Hard Graphite
26867AL0	Brushed Hard Graphite
26867DL0	Brushed Warm Sunset
26867EN0	Brushed Nickel InfinityFinish
26867GN0	Brushed Cool Sunrise

CERTIFICATIONS:

- WaterSense
- CEC Certified
- CALGreen Compliant
- Massachusetts Plumbing Board Approved
- Energy Policy Act of 1992
- CSA B125.1
- ASME A112.18.1

PRODUCT FEATURES:

GROHE DreamSpray

NOTE: Install this product according to the installation guide. ADA, CSA compliant when installed to the specific requirements of these regulations.

We reserve the right to make revisions without notice to product specifications. 05-19-2026

US
Tel: 1.630.582.7711 Fax: 1.630.582.7722
For the most current Specification Sheet, go to www.grohe.us.

Canada
Tel: 1.888.644.7643 Fax: 1.905.366.2071
For the most current Specification Sheet, go to www.grohe.ca.

PART OF LIXIL

26867

EUPHORIA CUBE+

GROHE SPA

EUPHORIA CUBE+ STICK HAND SHOWER - 1 SPRAY, 1.75 GPM (6.6 L/MIN)

TECHNICAL DATA:

Product Height	216 mm
Product Length	24 mm
Product Width	24 mm
GPM (Min)-GPM (Max)	1.75 GPM

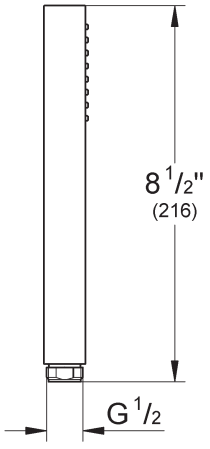

26634
EUPHORIA CUBE+
WALL UNION

GROHE SPA

STANDARD SPECIFICATION:

- GROHE LongLife finish
- ½" NPT threads
- Check valve included to prevent backflow



AVAILABLE FINISHES:

26634000	GROHE StarLight Chrome
266342430	Matte Black
26634A00	Hard Graphite
26634AL0	Brushed Hard Graphite
26634DL0	Brushed Warm Sunset
26634EN0	Brushed Nickel InfinityFinish
26634GN0	Brushed Cool Sunrise

CERTIFICATIONS:

- Massachusetts Plumbing Board Approved
- Energy Policy Act of 1992
- CSA B125.1
- ASME A112.18.1

PRODUCT FEATURES:

NOTE: Install this product according to the installation guide. ADA, CSA compliant when installed to the specific requirements of these regulations.

We reserve the right to make revisions without notice to product specifications. 10-14-2025

US
Tel: 1.630.582.7711 Fax: 1.630.582.7722
For the most current Specification Sheet, go to www.grohe.us.

Canada
Tel: 1.888.644.7643 Fax: 1.905.366.2071
For the most current Specification Sheet, go to www.grohe.ca.

PART OF LIXIL

26634
EUPHORIA CUBE+
WALL UNION

GROHE SPA

TECHNICAL DATA:

Product Height	52 mm
Product Length	66 mm
Product Width	52 mm

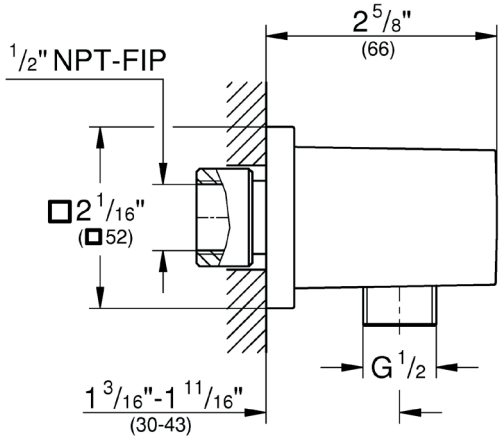

13 305
EUROCUBE®
TUB SPOUT

Pure Freude an Wasser

GROHE

STANDARD SPECIFICATION:

- GROHE StarLight®
- 6 11/16" Spout reach
- Wall mount
- ½" Inlet



PRODUCT FEATURES:

GROHE StarLight®

CERTIFICATIONS:

- Massachusetts Plumbing Board Approved
- Energy Policy Act of 1992
- CSA B125.1
- ASME A112.18.1

AVAILABLE FINISHES:

13305000	GROHE StarLight® Chrome
133052430	Matte Black
13305A00	Hard Graphite
13305EN0	Brushed Nickel InfinityFinish™
13305GN0	Brushed Cool Sunrise

NOTE: Install this product according to the installation guide. ADA, CSA compliant when installed to the specific requirements of these regulations.

We reserve the right to make revisions without notice to product specifications. 04-04-2023

US
Tel: 1.630.582.7711 Fax: 1.630.582.7722
For the most current Specification Sheet, go to www.grohe.us.

Canada
Tel: 1.888.644.7643 Fax: 1.905.366.2071
For the most current Specification Sheet, go to www.grohe.ca.

PART OF LIXIL

13 305

EUROCUBE®

TUB SPOUT

Pure Freude an Wasser

GROHE

TECHNICAL DATA:

Product Height	**60.00 mm**
Product Length	**195.00 mm**
Product Width	**60.00 mm**
Fitting Spout Reach	**170.00 mm**

