robern

P2C2036 Cabinet - Specification Sheet

Features

- Modular Cabinet - combine multiple cabinets, lighting, or mirrors
- All cabinets are non-handed/reversible
- Mirrored interior with 4 adjustable, cantilevered glass shelves
- Cantilever shelving adjustable in 1″ increments
- Includes installation hardware for recess mounting
- Can be recessed or surface mounted (surface mounting kit required)

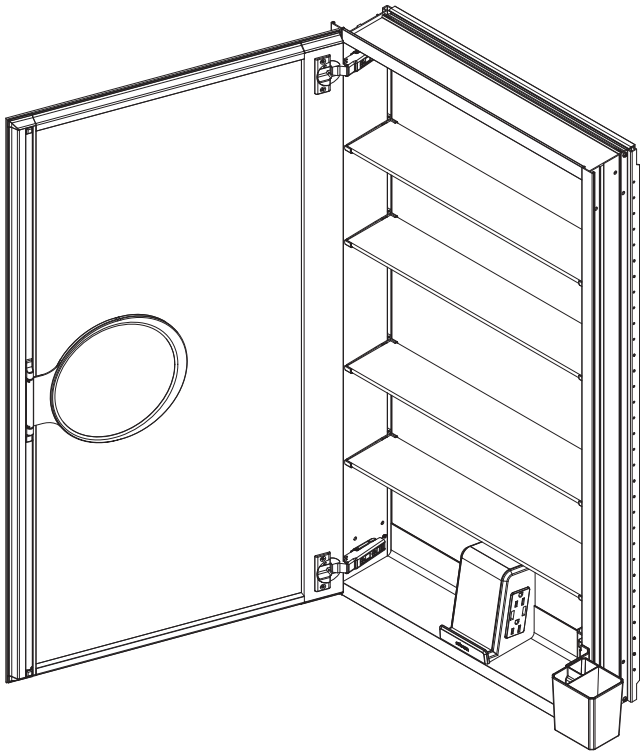

Optional Features & Upgrades

- PORTRAY Quick Caddy (QUICKCADDY)
- PORTRAY Electric Upgrade (P2ELECTRIC)
- PORTRAY Sliding Magnification Mirror available for 16″, 20″, and 24″ widths*
- Blum 110° slow close hinges
- Polished edge or 3/4″ beveled front mirror
- Modular design with multiple installation options (See options below).
- Other widths/heights available ranging 12″ to 24″ wide, 20″ to 72″ high
- Glass Bins (GLASSBIN3.25, GLASSBIN5.25, GLASSBIN8.5)

** This accessory cannot be added post-sale.*

Construction

- Rust free Satin anodized aluminum construction
- Blum hinges standard
- 3 mirror design – rear of cabinet and both sides of door

Codes/Standards Applicable

- Electric Option Models are ETL certified to:
  - UL 962
  - CSA Standard C22.2 No. 68

Dimensions

Width: 19-1/4″ (489 mm)
Height: 36″ (914 mm)
Depth: 4-5/8″ (117 mm) When surface mounted
7/8″ (22 mm) When recessed

Installation Options

Recessed Mount - Rough Opening - 18-1/2″ W x 35-1/4″ H x 4″ D (470 mm W x 895 mm H x 102 mm D)
Surface Mount (Single Cabinet) - Reference Surface Mount Kit when ordering (P2SMKIT)
Pairs with Modular mirrors
Gangs to PL PORTRAY Series Cabinet - Reference PL PORTRAY Ganging Kit when ordering (P2RMGKIT, P2SM-GKIT)
Gangs to Vesper Lighting

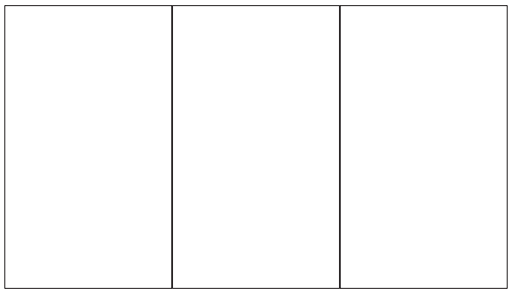

Ganging Cabinet-to-Cabinet Arrangement

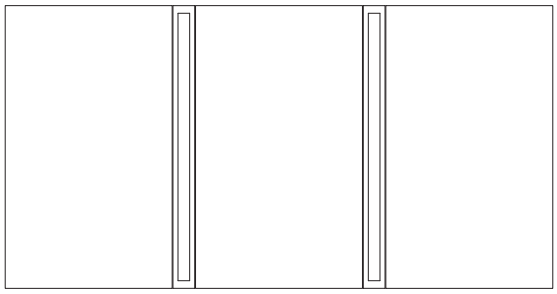

Ganging Cabinet-to-Lights Arrangement

Model Number Key

PL PORTRAY Series	Width	Height	Depth	Mirror Edge Style	Upgrade Option	
P2C	20	36	D4	FP = Polished Edge	BA = No Upgrade	FS = Storage Upgrade
				FB = Bevel Edge	SC = Slow Close Upgrade	TU = Electric Upgrade
					MM = Magnification Mirror Upgrade	FT = Storage and Electric Upgrade

USA/Canada: 1.800.877.2376
www.robern.com

Electrical System

- 120 VAC 60HZ 20A
- Field wire location as shown in drawing
- 1/2″ conduit (Ø 7/8″ actual) electrical knockout location shown below

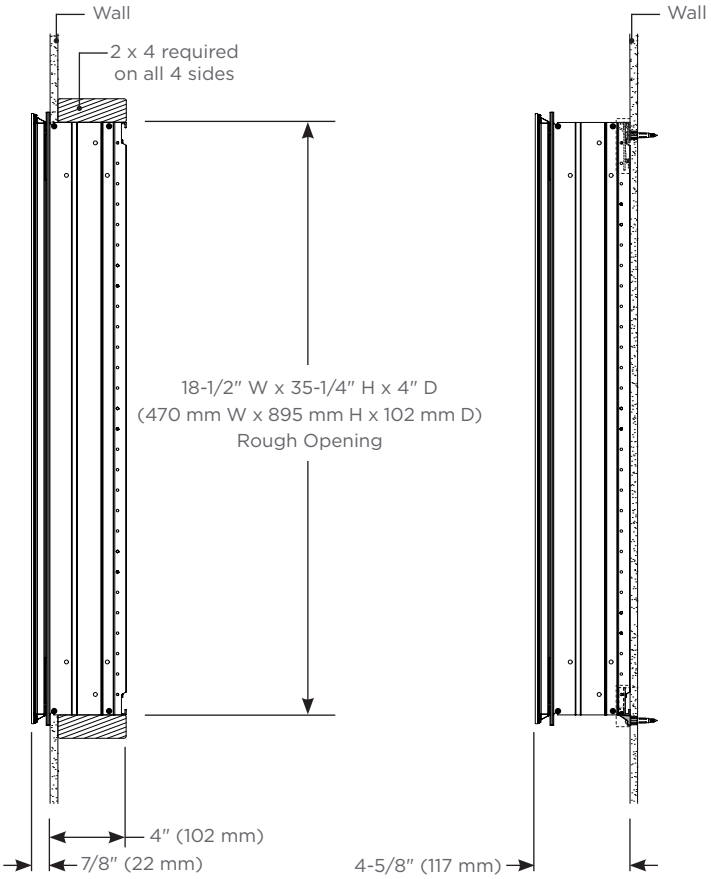

Recessed Mount

Surface Mount

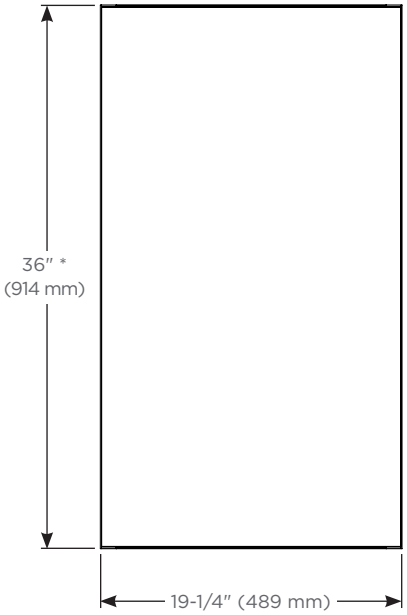

Cabinet Dimensions

**Door is 1/8″ (3 mm) smaller than cabinet*

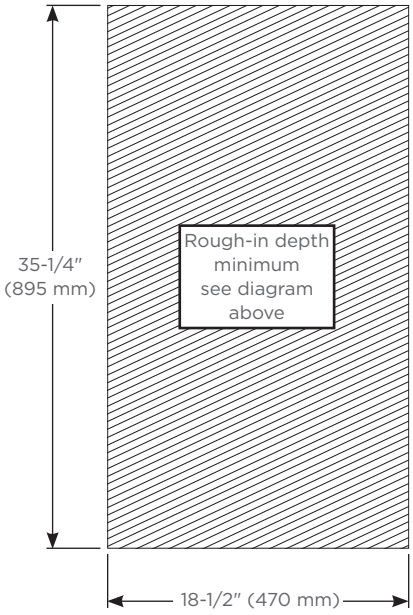

Rough-in Dimensions

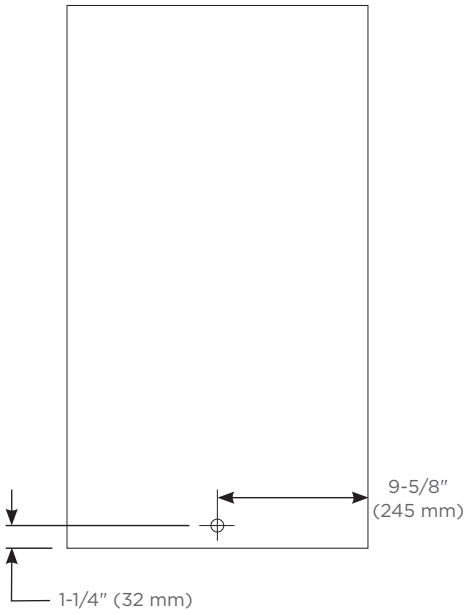

Back of Cabinet - Wire Access Location

robern
Robern, Inc | 701 N. Wilson Ave. | Bristol, PA 19007

robern

Vesper™ Edgeline Lights
GLA36ELPS3D Specification Sheet

FEATURES

- Seamless, flush aesthetic
- Modular - combines with multiple cabinet lines
- Provides warm, ambient lighting
- Dimmable when paired with a compatible residential dimmer
- Energy efficient LEDs with an estimated life of 53,000 hours:

Kelvin	3000K
CRI	90+
R9 Value	60+
Delivered Lumens	300

MATERIALS & CONSTRUCTION

- Rust free anodized aluminum and glass construction
- Anodized aluminum base structure
- Quality polished edge mirror finish
- Built-in diffuser
- fully encased construction eliminates visibly exposed LEDs and electrical components
- Wired internally - Front access serviceability

CODES & STANDARDS

ETL certified for damp locations to:
- UL 1598
- CSA C22.2 No. 250.0

DIMENSIONS

- Width: 1-3/8" (35 mm) per light
- Height: 36" (915 mm)
- Depth: 4-5/8" (118 mm) When surface mounted
  15/16" (23 mm) When recessed

MORE INFORMATION

Scan the QR code to see the rough opening and electrical details found in the Vesper Dimmable Light installation instructions.

Use the camera app on your mobile device to look at this QR code. This will allow you to quickly access web pages and other relevant documents.

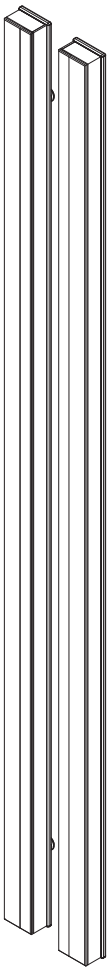

Included Electrical Enclosure (Power Supply):

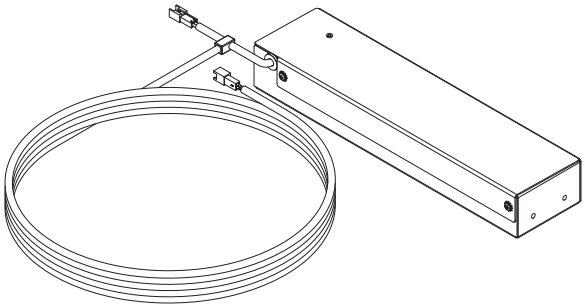

MODEL NUMBER KEY

	WIDTH	HEIGHT	DESIGN	QTY OF LIGHTS	BODY COLOR	COLOR TEMP	LED Engine
GL	A = 1-3/8"	36 = 36"	E = Edgeline	P = Pair of Lights	S = Silver	3 = 3000K	D = Dimmable

OPTIONS

- Other widths / heights / light designs available
- Accessories:
  - 4' (1.2 M) Extension Cable (GLACABLE4)

INSTALLATION OPTIONS

- Compatible Mounting Kits (Single Cabinet):
  - Surface Mount Kit (P2SMKIT36D4P)
- Gangs between multiple cabinets via:
  - Surface Mount Ganging Kit (P2SM-GKIT36D4P)
  - Recessed Ganging Kit (P2RMGKIT)
- Compatible with M Reserve, Profiles, and PL Portray
- **Recessed Mount Rough Opening:**
  Cabinet RO W + 2-3/4" W per set x 35-1/4" H
  (Cabinet RO W + 70 mm W per set x 895 mm H)

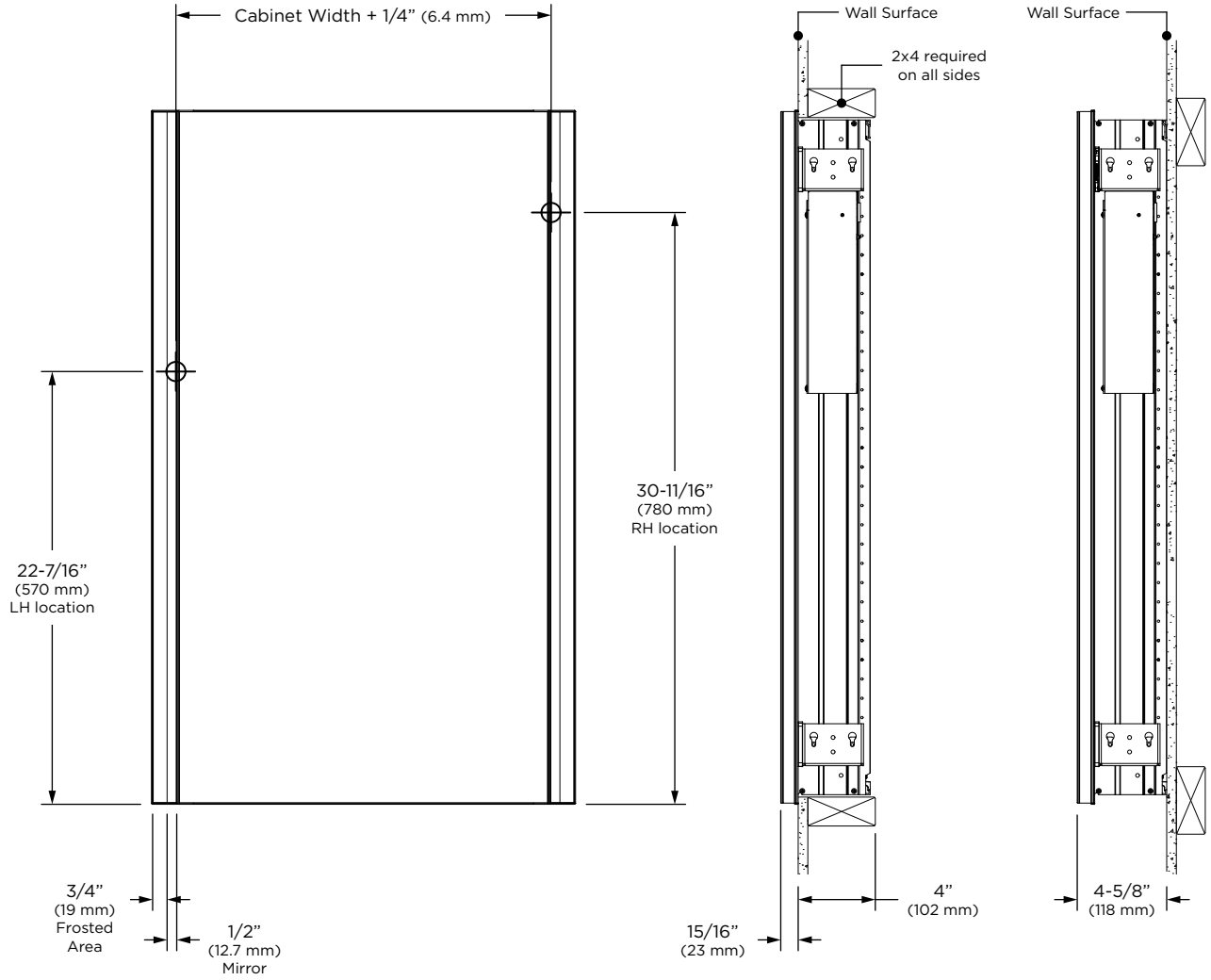

Front View | Recessed Mount | Surface Mount