G-8006

Thermostatic Valve - Rough - M-Series

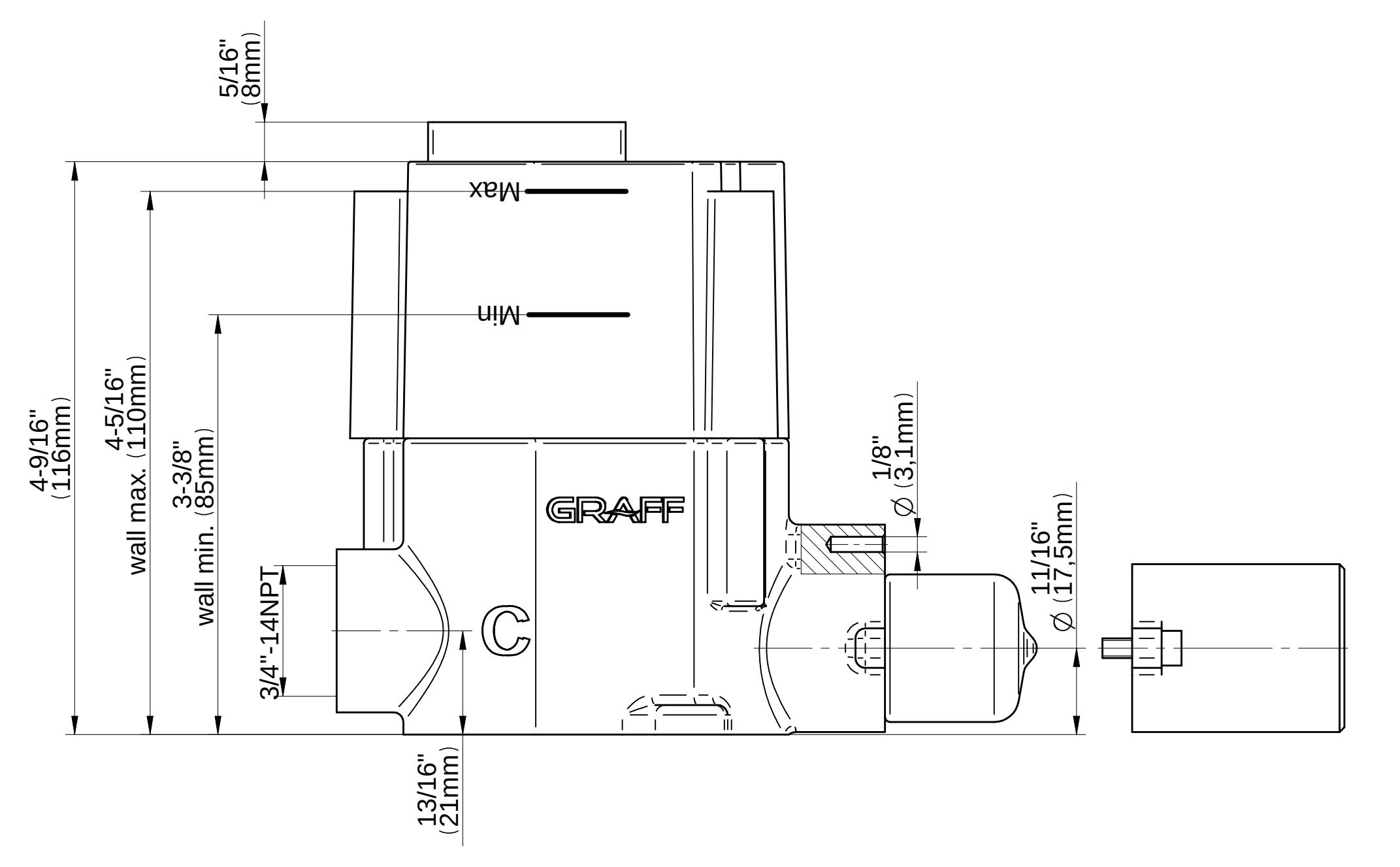

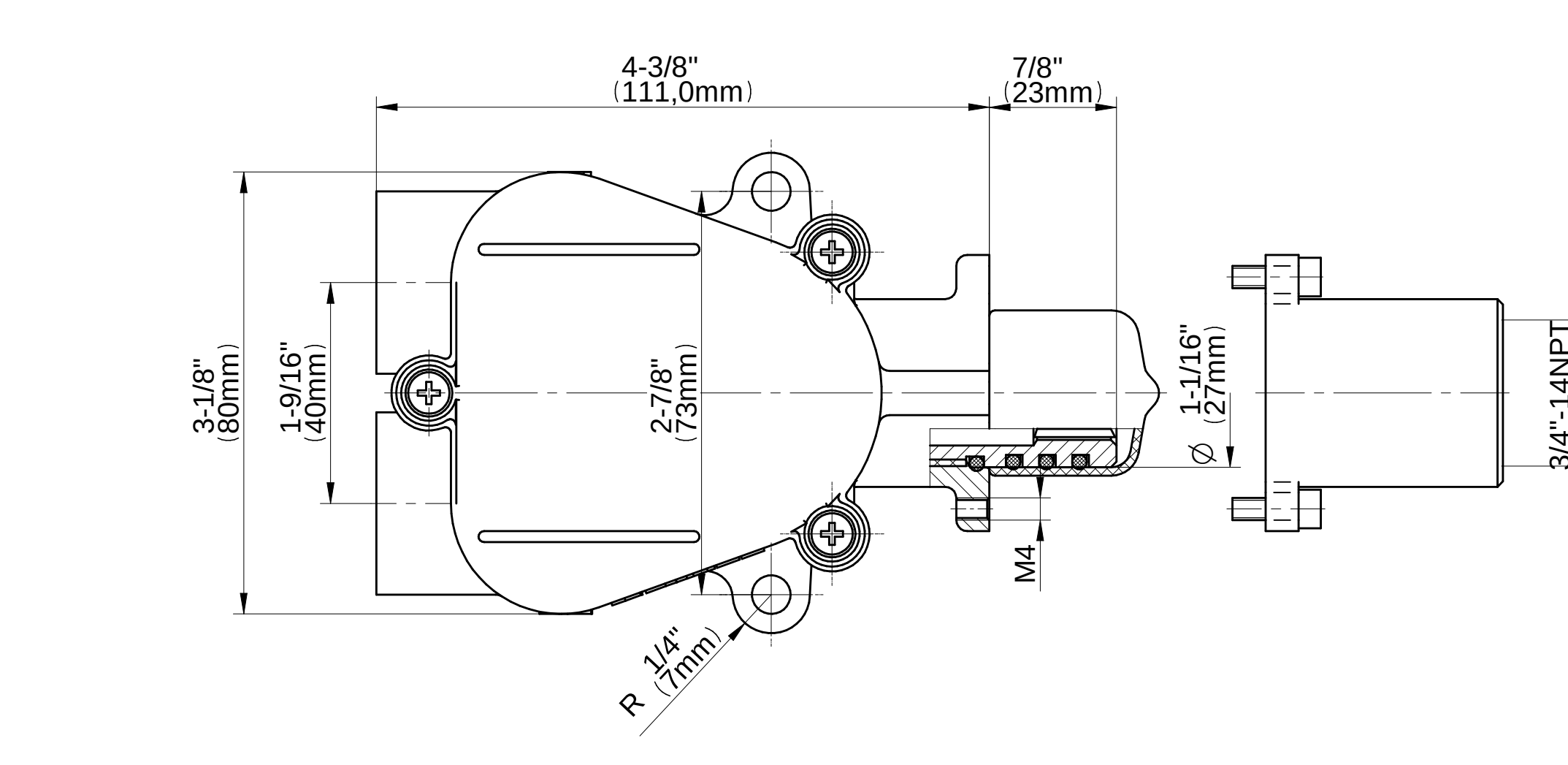

GRAFF®

CUTTING EDGE DESIGN

G-8053

M-Series

3-Way Diverter Control Valve WITH Off Function (No Pass-Through)

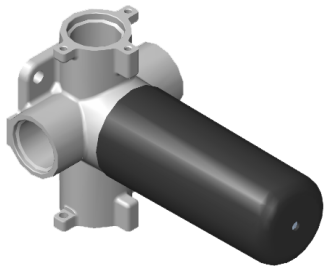

Product Features

- 3/4" universal inlets/outlets with female threads
- Stacking inlet feature
- Supplied with protective plastic cover
- CalGreen compliant dependent on functions

Code Compliance

- *CAL*Green

Warranty

- Limited lifetime warranty

For complete warranty information go to www.graff-faucets.com/en/info/faqs

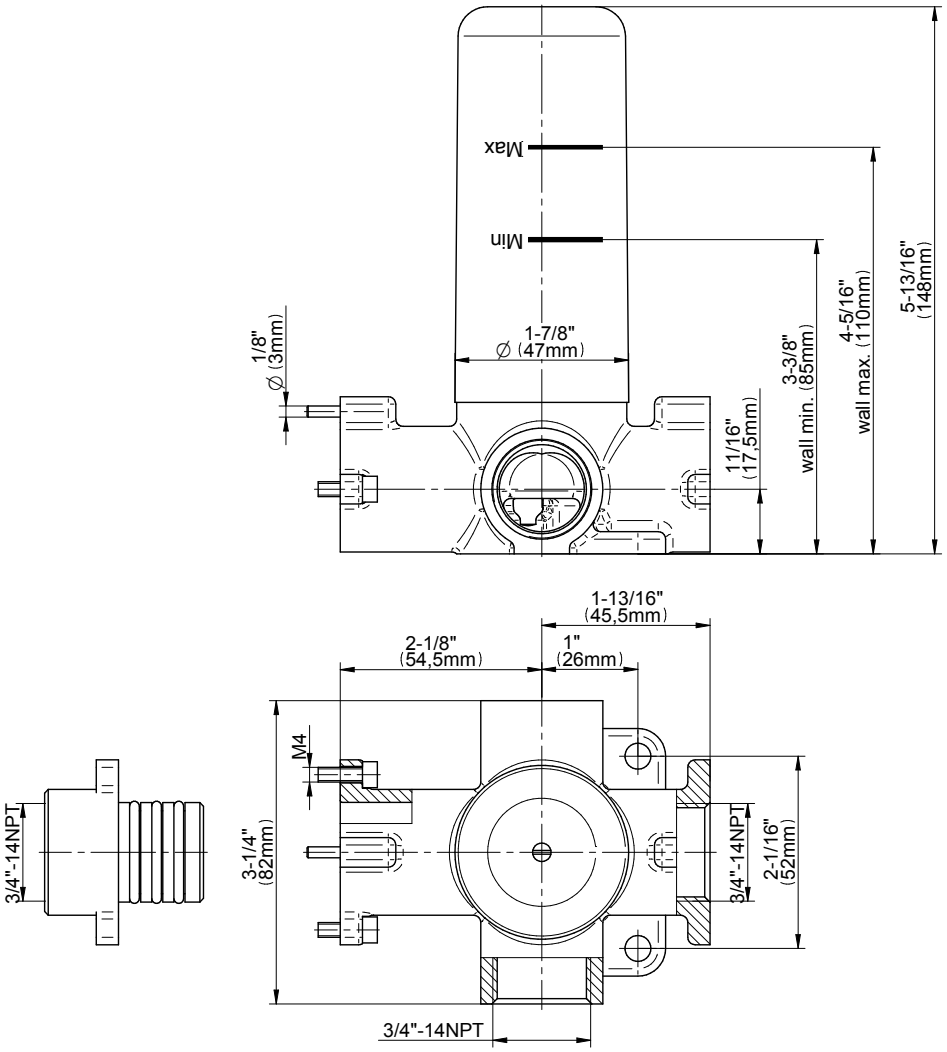

The measurements shown are for reference only. Products and specifications shown are subject to change without notice. Revised 3/2016.

www.graff-faucets.com | phone: 800-954-4723