C1-85
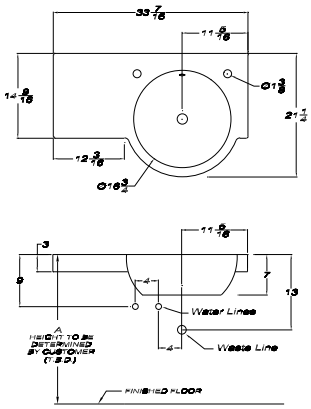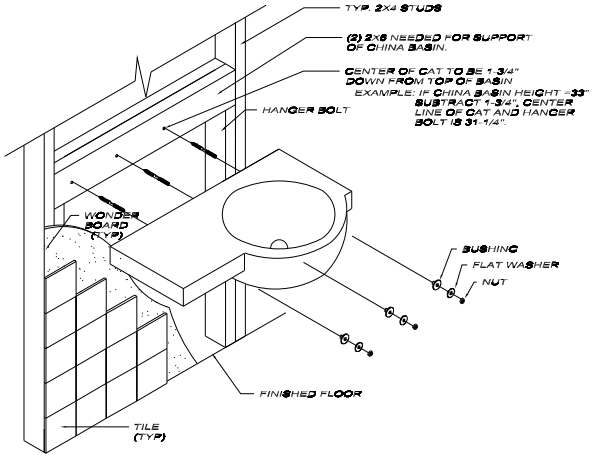
Hastings
TILE & BATH COLLECTION