Premier Copper Products

CODE/STANDARD COMPLIANCE
* IAPMO/cUPC LISTED

ITEM # KASDB33229F 33" KITCHEN APRON SINGLE BOWL SINK W/ FLEUR DE LIS DESIGN

OUTER DIMENSIONS: 33"X22"X9"
INNER DIMENSIONS: 31"X19"X9"
DRAIN SIZE: 3.5" STANDARD
MATERIAL GAUGE: 14

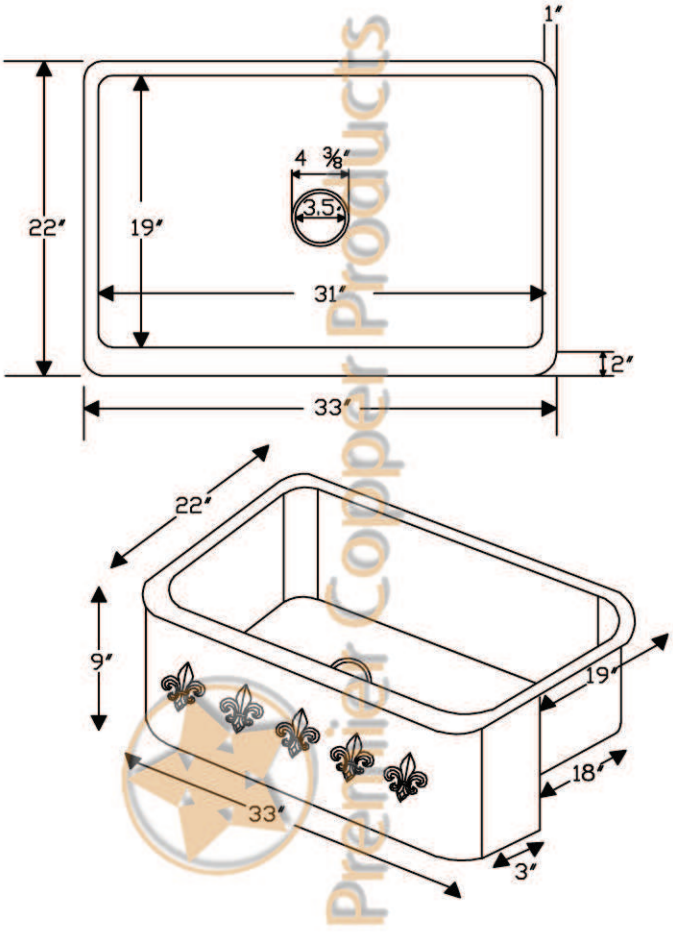

IMPORTANT: THIS PRODUCT IS HAND CRAFTED AND SMALL VARIANCES MAY OCCUR. DIMENSIONS MAY VARY UP TO 1/4". DO NOT MAKE ANY INSTALLATION CUTS UNTIL YOU RECEIVE YOUR SINK.