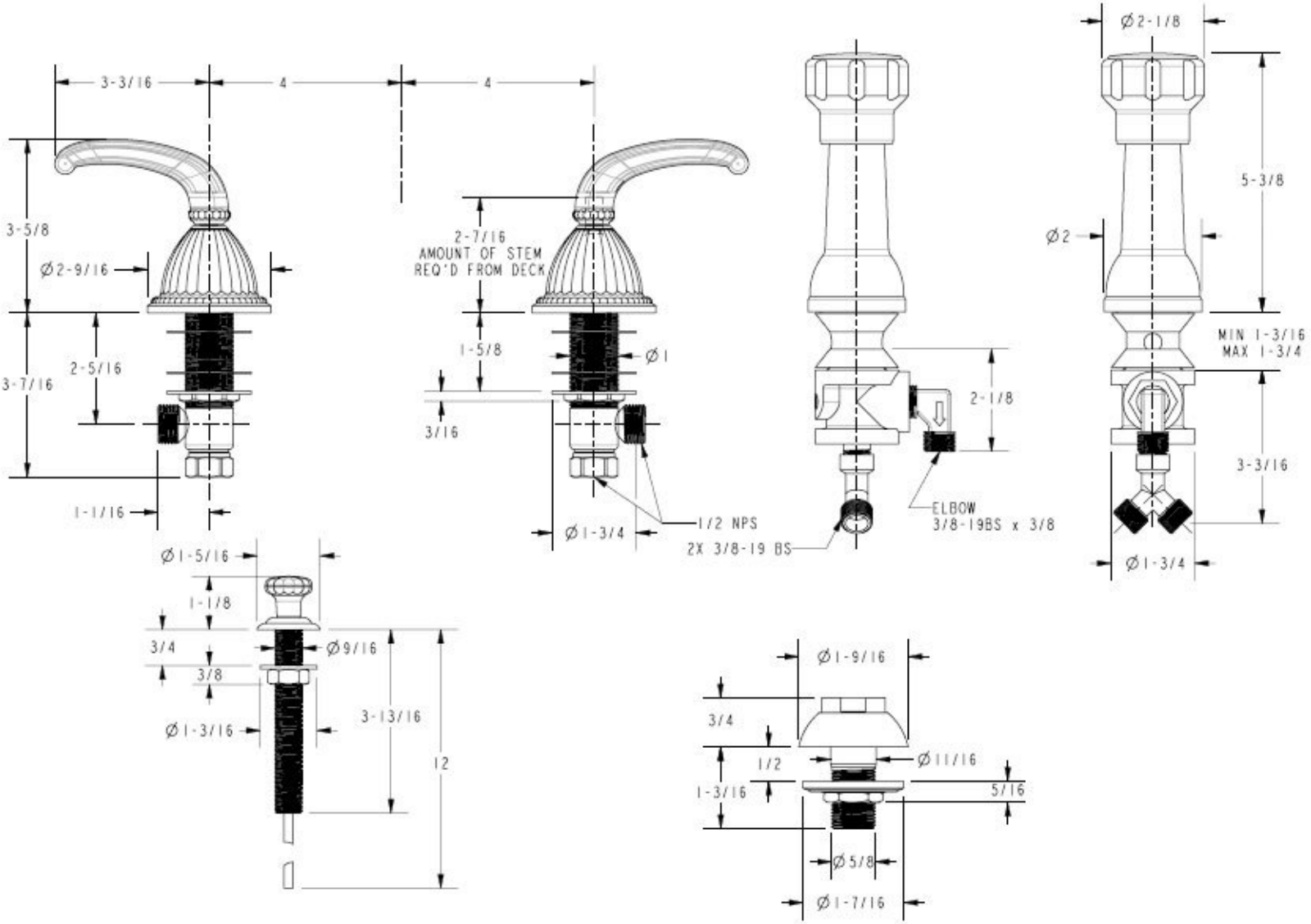
3-3/16
4
4
3-5/8
Ø2-9/16
2-5/16
3-7/16
1-1/16
2-7/16
AMOUNT OF STEM
REQ'D FROM DECK
1-5/8
Ø1
3/16
Ø1-3/4
1/2 NPS
2X 3/8-19 BS
2-1/8
ELBOW
3/8-19BS x 3/8
Ø2-1/8
5-3/8
Ø2
MIN 1-3/16
MAX 1-3/4
3-3/16
Ø1-3/4
Ø1-5/16
1-1/8
3/4
Ø9/16
3/8
Ø1-3/16
3-13/16
12
Ø1-9/16
3/4
1/2
Ø11/16
1-3/16
5/16
Ø5/8
Ø1-7/16