# INTEGRA™

## Integra Widespread Lavatory Faucet

IN10

L1

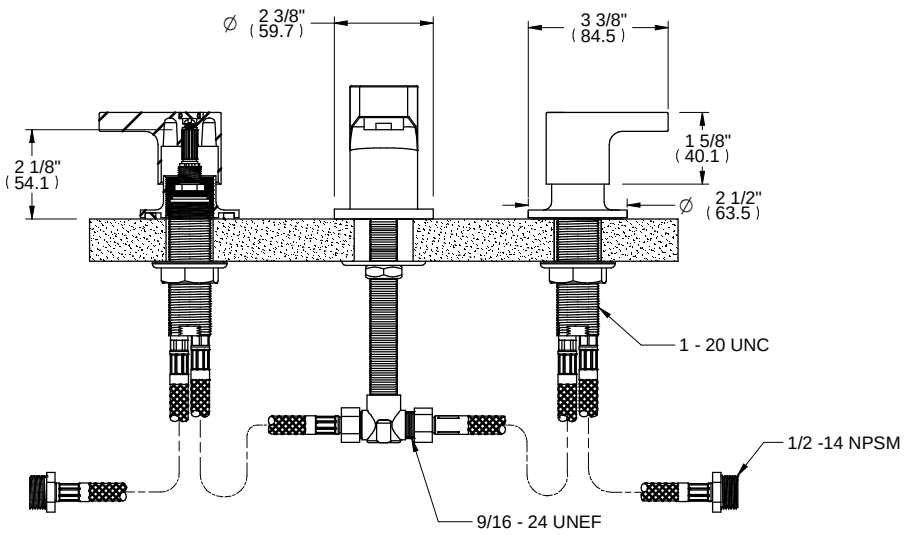


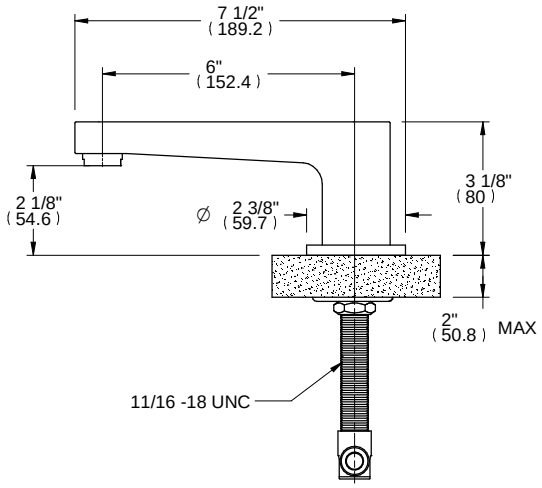


ALTMANS RESERVES THE RIGHT TO MODIFY AND CHANGE SPECIFICATIONS AT ANY TIME.PLEASE VERIFY DIMENSIONS PRIOR TO INSTALLATION.

**Features**

Available in Chrome & Xsn
Low Lead Brass Construction
1/4 Turn Ceramic Disc Cartridge

**Through-Hole Specifications**

Spout: Ø 1 1/4 " MAX
Valve: Ø 1 1/4" MAX

DIMENSIONS SHOWN TO NEAREST 1/16"