ROCHDALE™

Bidet Set with Vacuum Breaker
RO70H1E20

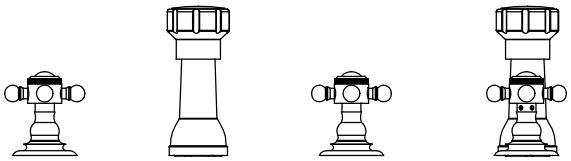

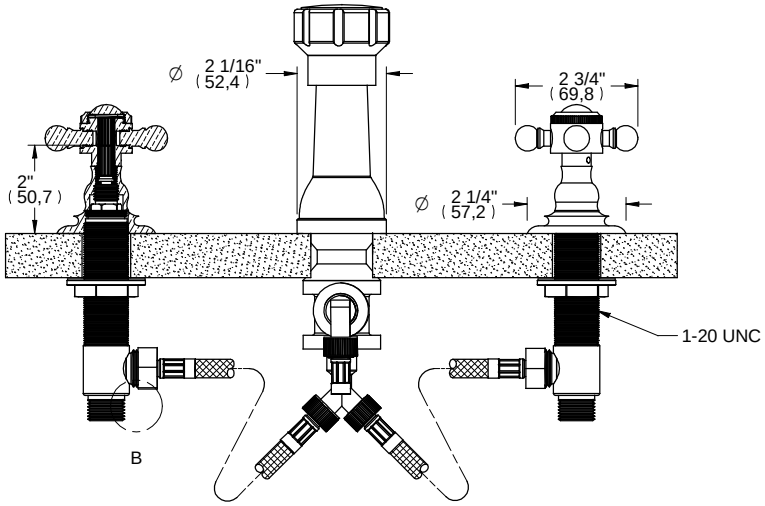

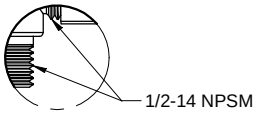

DETAIL B

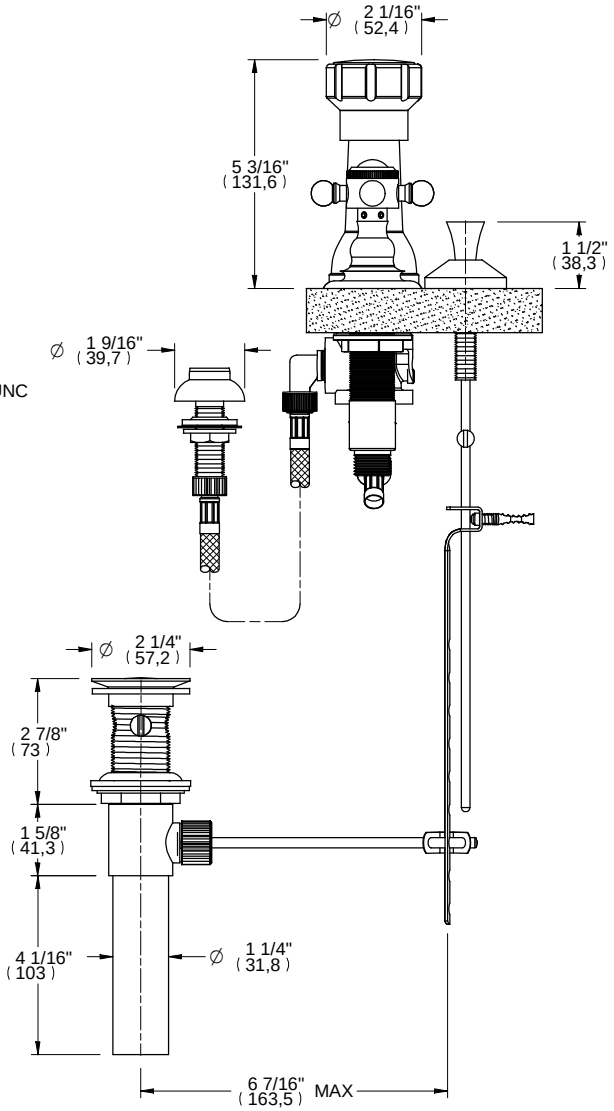

Features

Available in All Finishes
Brass Construction
1/4" Turn Ceramic Disc Cartridge

Through-Hole Specifications

All Holes 1 1/2" Max.

DIMENSIONS SHOWN TO NEAREST 1/16"