Cabinet:

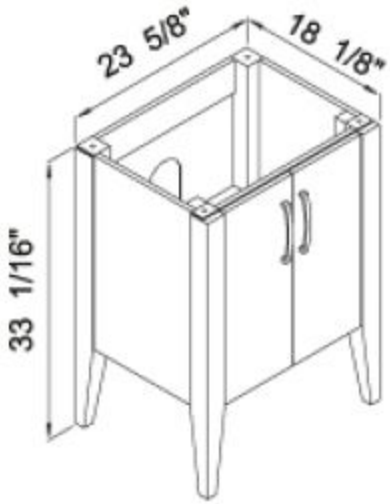
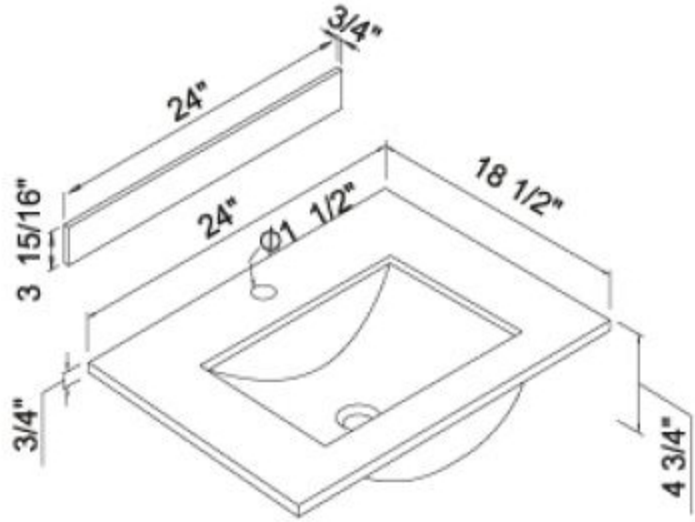
Glass Countertop