Produits Neptune

REVELATION 3672F

Bathtub

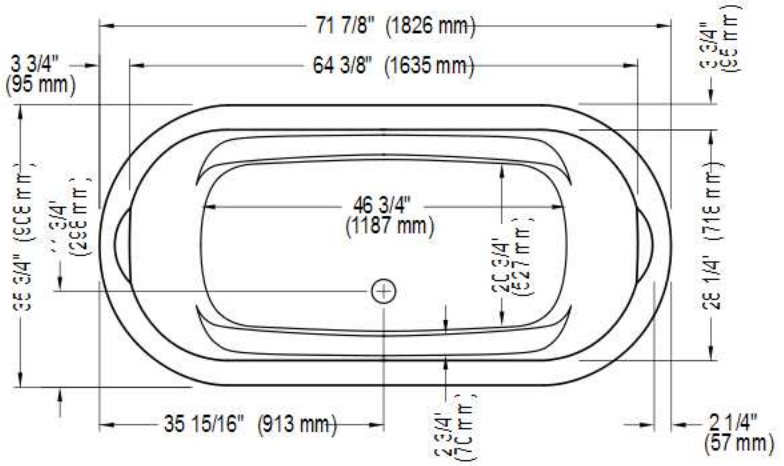

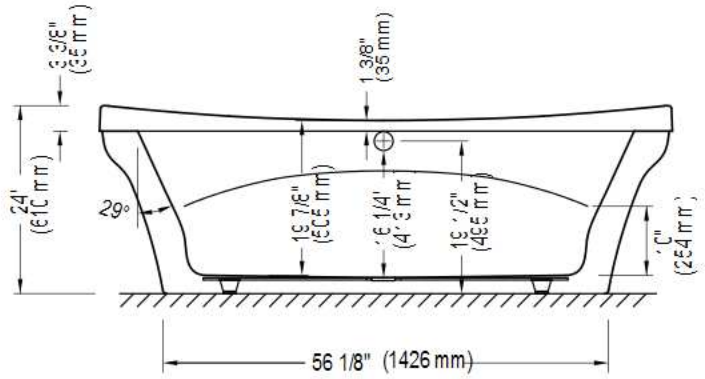

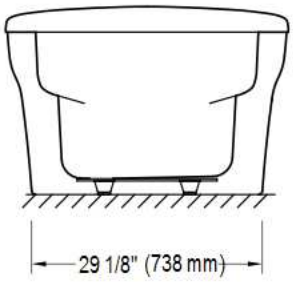

Right view

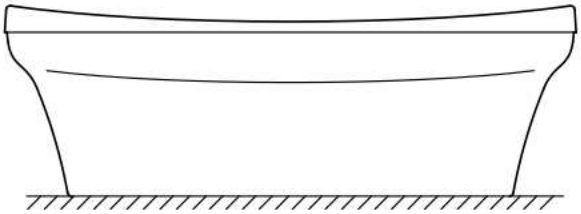

*All dimensions are approximate and subject to change without notice.
Please refer to the installation guide before beginning the installation

6835 PICARD STREET
SAINT-HYACINTHE, QUEBEC J2S 1H3
CANADA

PHONE 450 773 7058
FAX 450 773 5063
TOLL-FREE CANADA 1 888 226 7099
TOLL-FREE USA 1 888 226 7899

produitsneptune.com