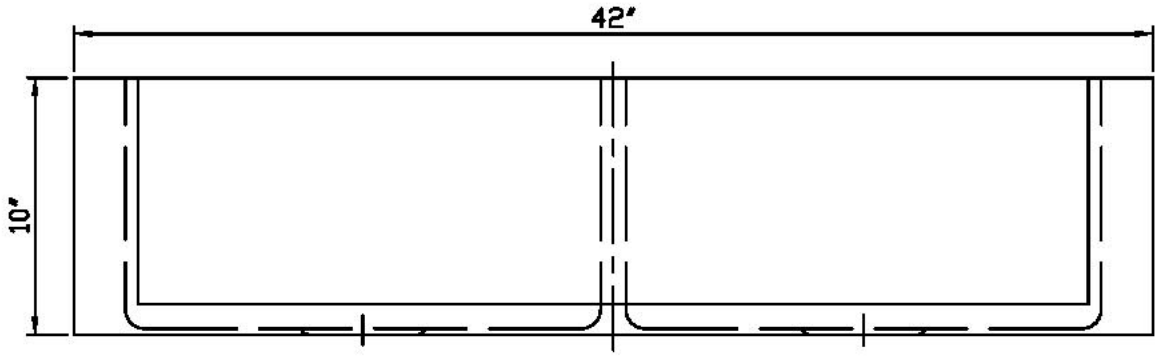

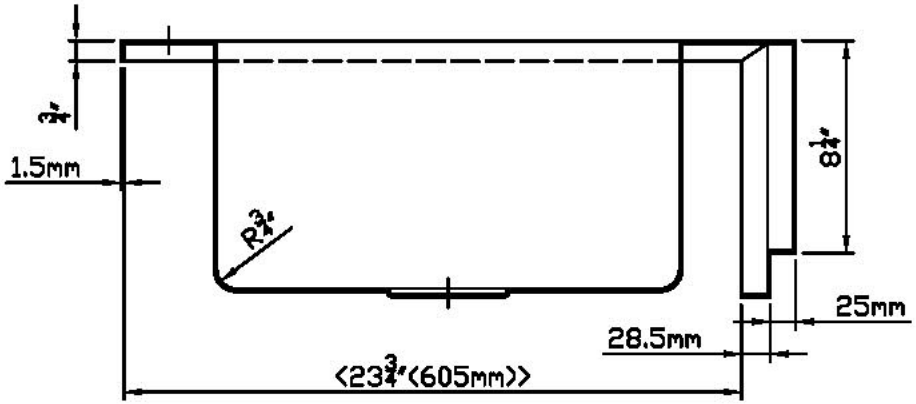

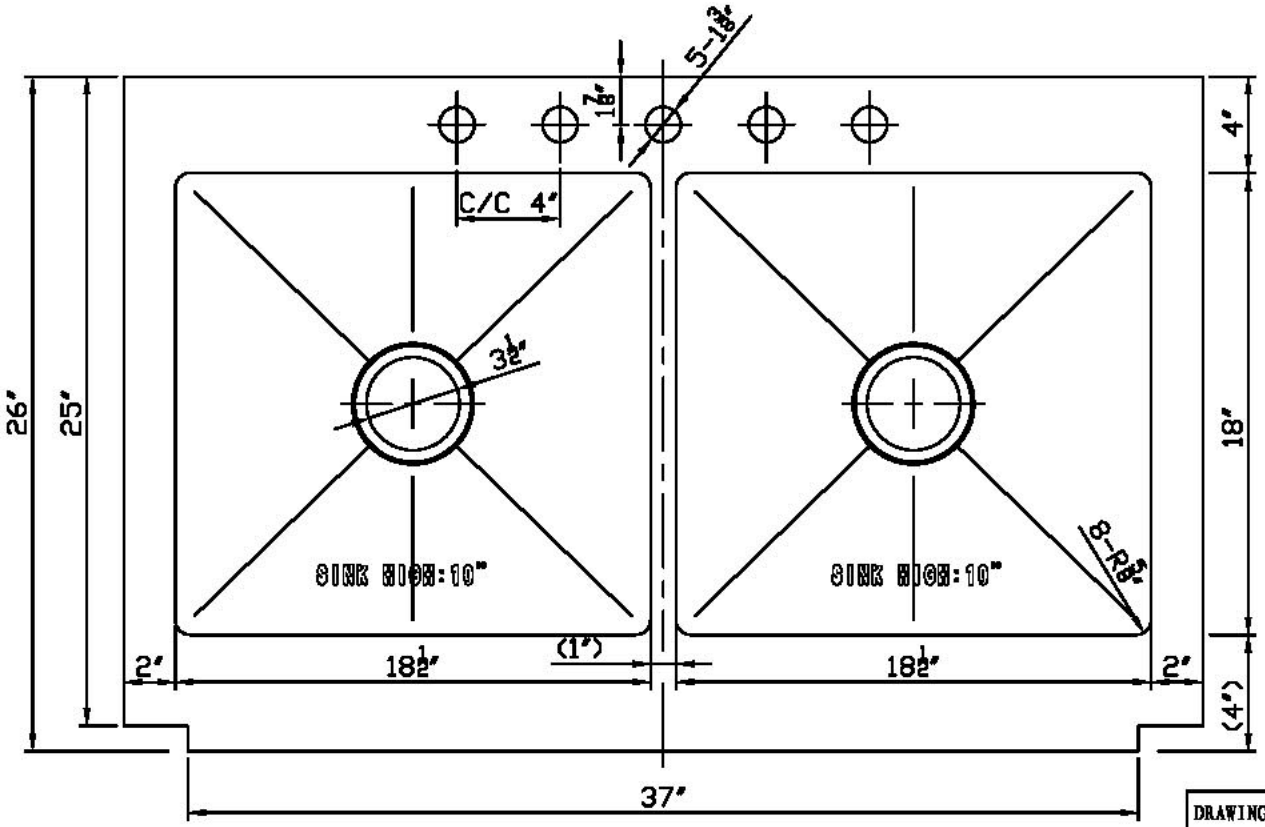

DRAWING NO. Empire-F42D		SCALE 1:7	Ref NO.
DESCRIPTIONS		QUANTITY	MATERIAL S/S304 1.5mm
DRAWN		**Empire Industrices Inc.**	
PROOF			
VERIFY			