3-984BP

Product Dimensions *(units are in inches)*

NOTES:
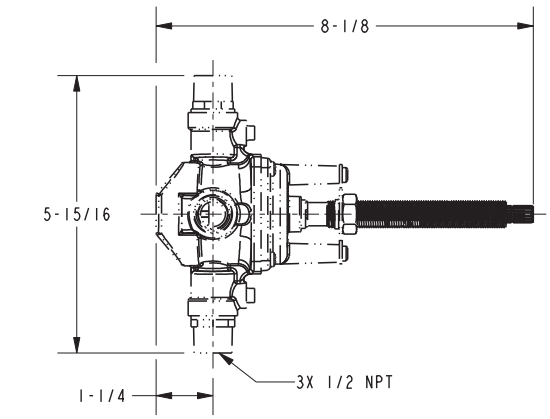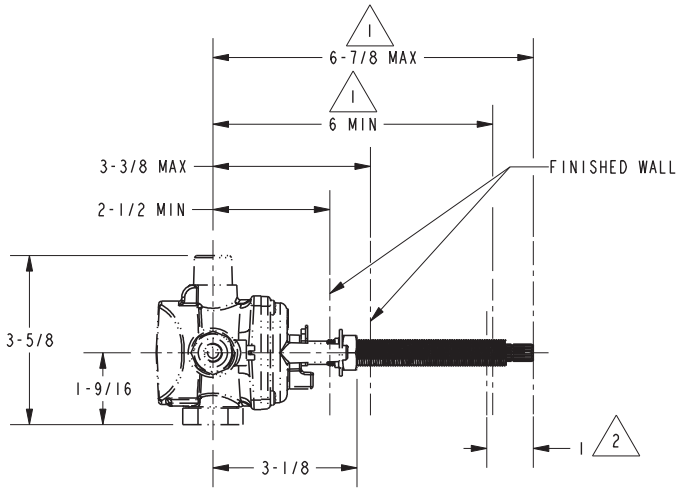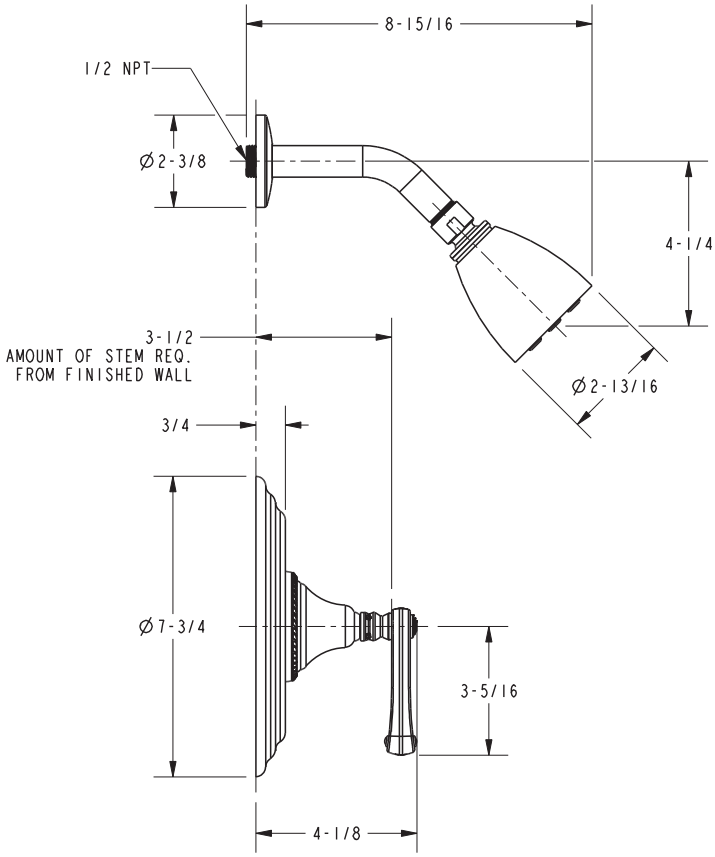
1. CUT STEM TO DIMENSION SHOWN.
2. CUT ALL-THREAD 1" SHORTER THAN STEM