3-1092BP

Product Dimensions *(units are in inches)*

NOTES:

1. CUT STEM TO DIMENSION SHOWN.
2. CUT ALL-THREAD 3/4" SHORTER THAN STEM.

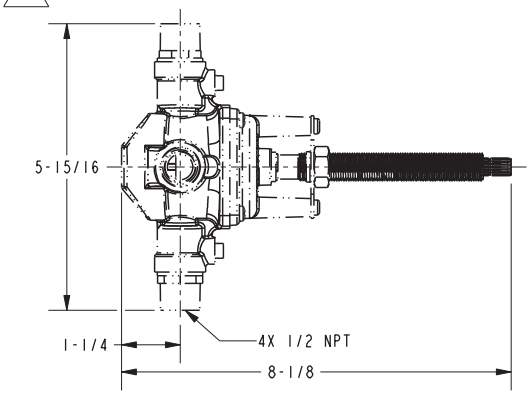

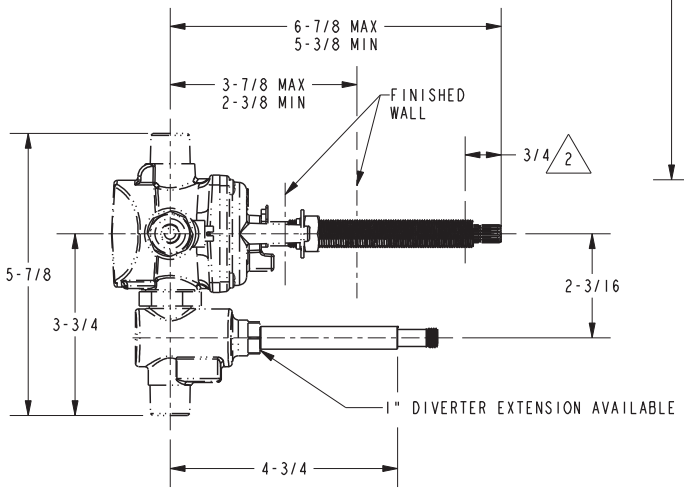

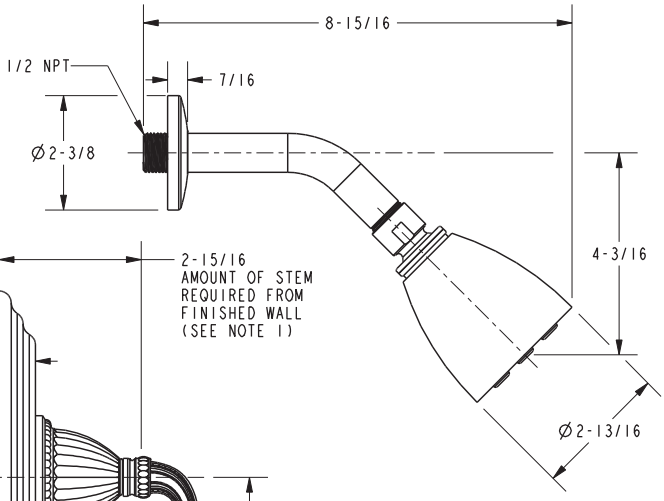

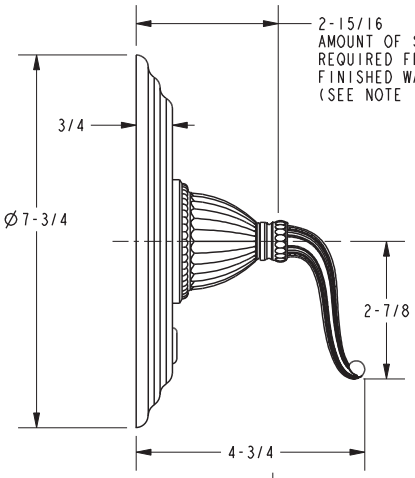

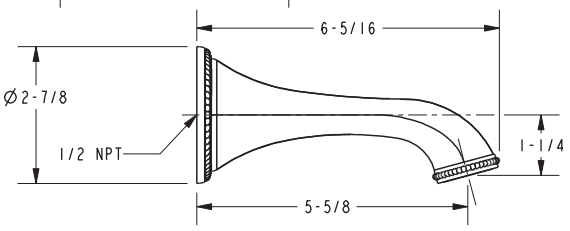

NEWPORT BRASS®
Flawless Beauty. From Faucet to Finish.™

t: 949.417.5207 | www.newportbrass.com

©2011 Brasstech, Inc.