7.5 cm (3") vertical shower arm

529XX

Specifications

Descriptions

- ½" inlet male NPT
- Eiffel flange

Available colors

- C : Chrome
- BN : Brushed nickel (PVD)

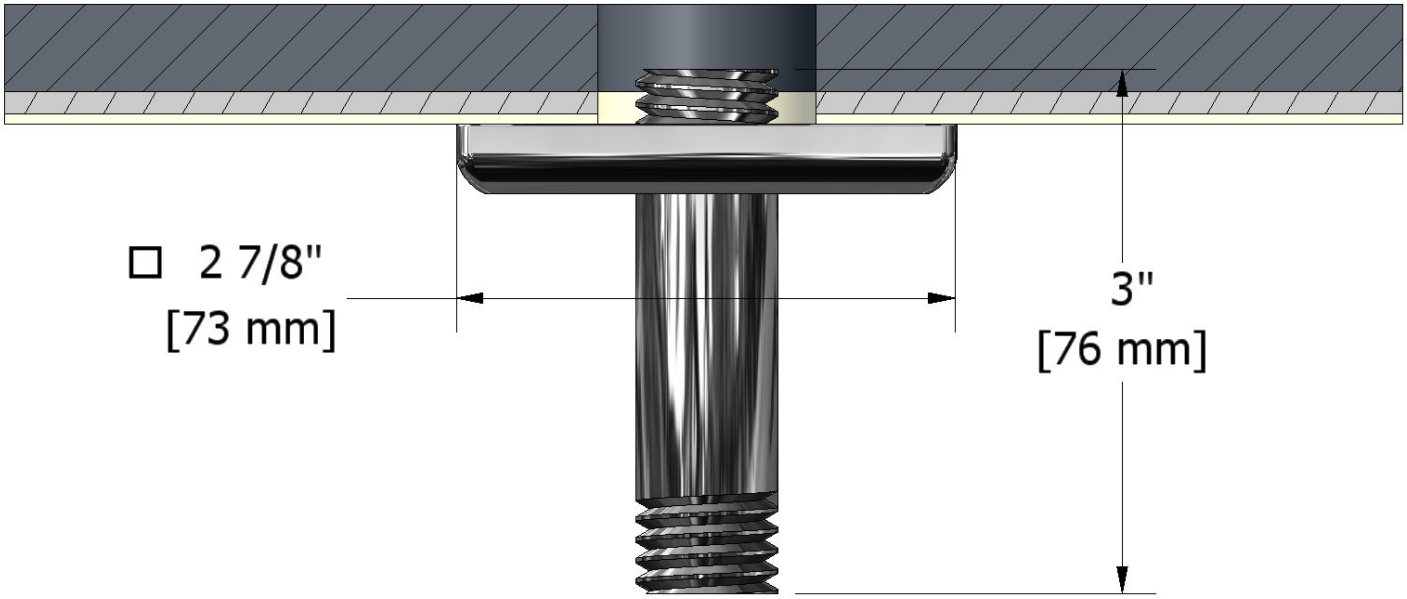

Sizes, models and finishes may differ from thoses presented.

Warranty

The Riobel inc. product carries a limited LIFETIME warranty on the finish Chrome, Gold (PVD), Brushed nickel (PVD), Night brushed (PVD), Polished nickel (PVD) and all working parts and is guaranteed from the initial date of purchase against all manufacturing defects. Other finished 1 year.

Customer Service

Ontario, West Canada : 888-287-5354 Quebec, Maritimes, United States : 866-473-8442

2014.05.07