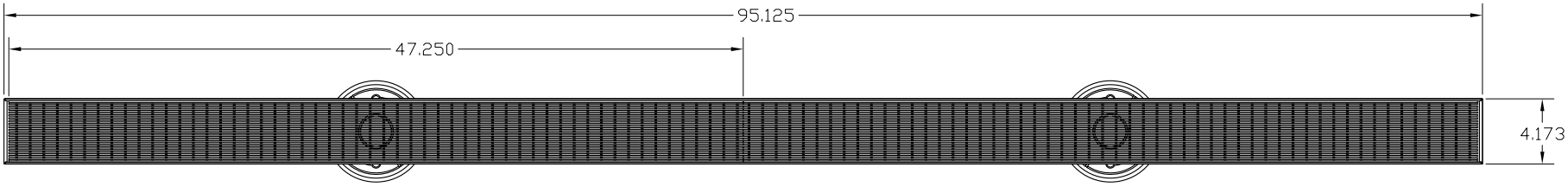

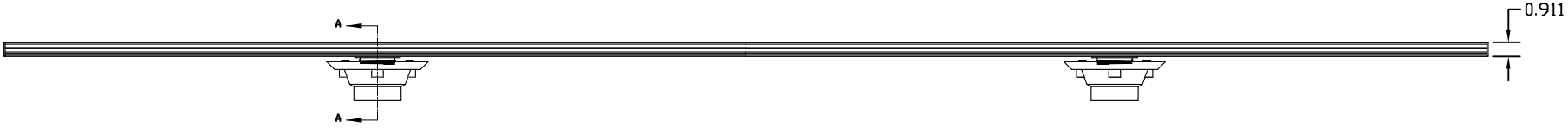

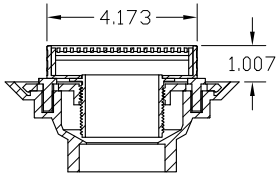

DRAIN CAN BE ADJUSTED UPWARD AN ADDITIONAL 1" IN HEIGHT

SECTION A-A

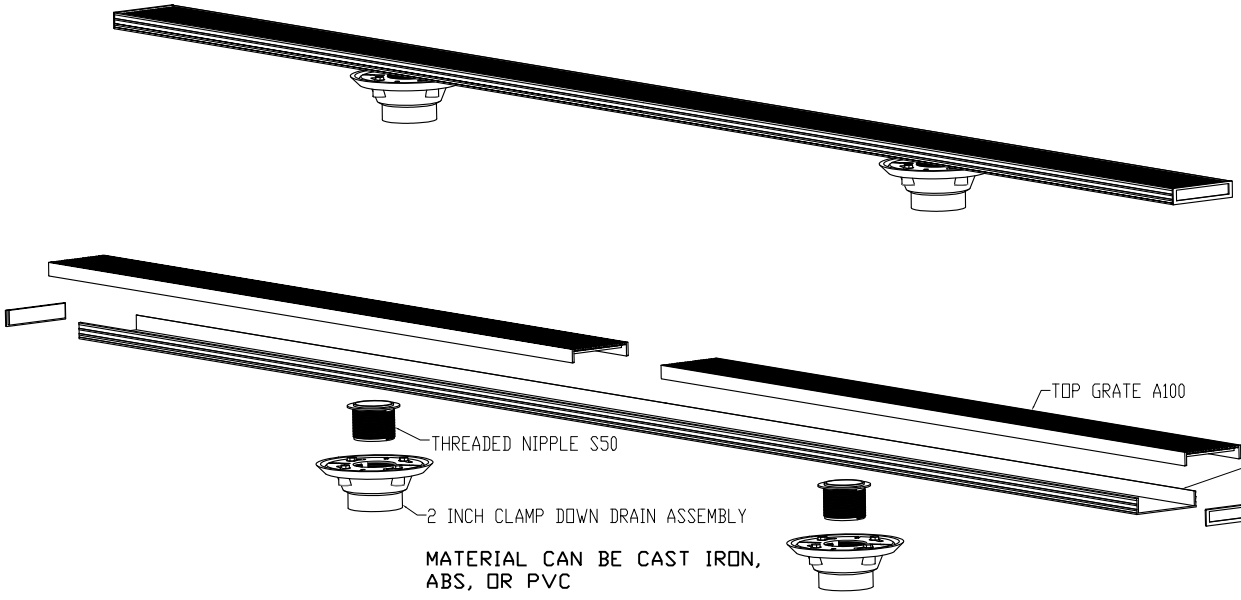

MATERIAL CAN BE CAST IRON, ABS, OR PVC

96 INCH ASSEMBLY USES TWO 48 INCH TOP GRATES AND TWO DRAIN OUTLETS

UNLESS OTHERWISE SPECIFIED		NAME	DATE	INFINITY DRAIN
DIMENSIONS ARE IN INCHES TOLERANCES: FRACTIONAL ± ANGULAR MACH ± BEND ± TWO PLACE DECIMAL ± THREE PLACE DECIMAL ±	DRAWN	CT	7-29-12	TITLE: AG100 SHOWER DRAIN
	CHECKED			
	ENG APPR.			
	MFG APPR.			
INTERPRET GEOMETRIC TOLERANCING PER:	Q.A.			
MATERIAL	COMMENTS:			SIZE D · DWG. NO. AG10096 ASSEMBLY · REV
FINISH				SCALE: 1:2 · WEIGHT: · SHEET 1 OF 1