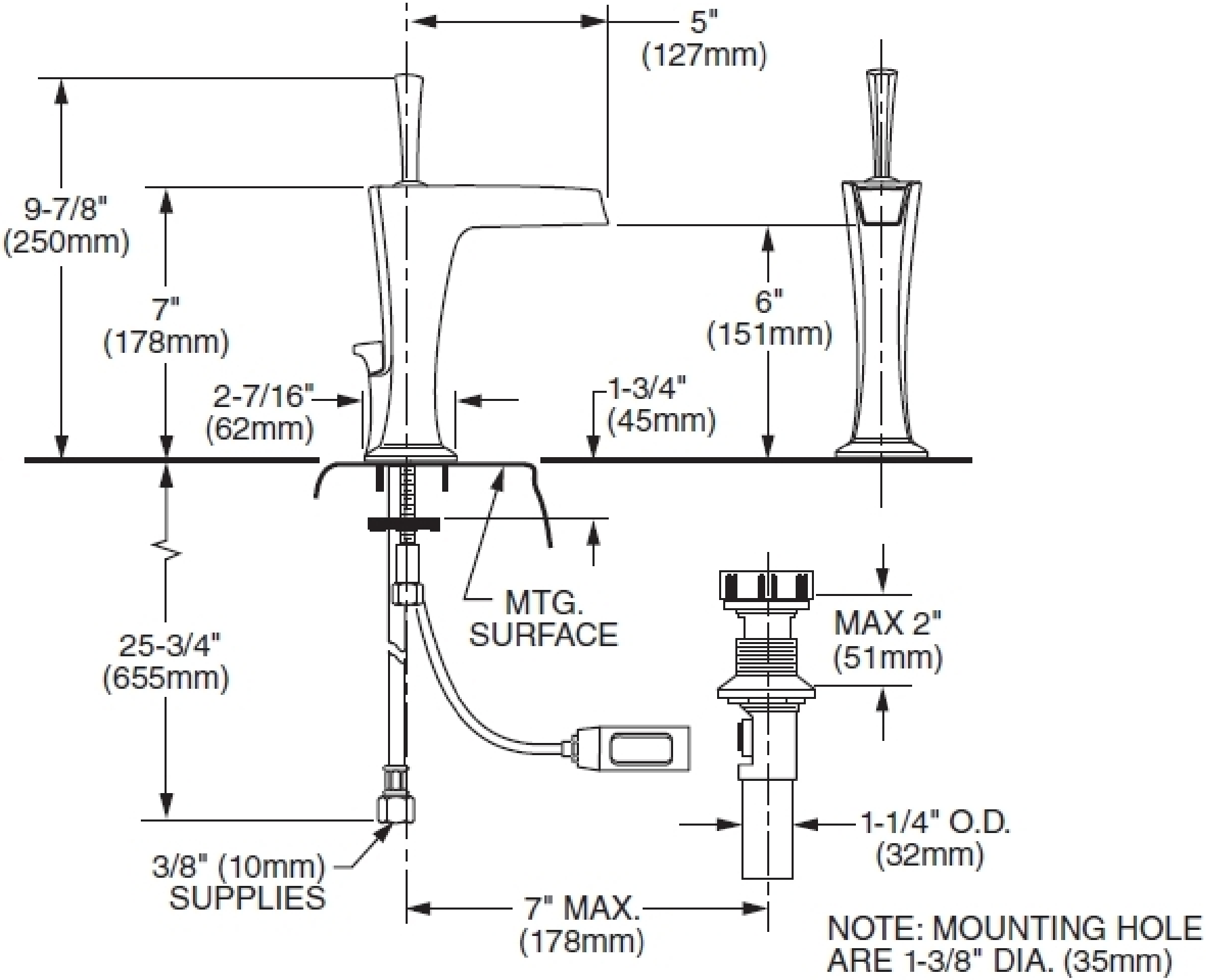
5"
(127mm)
9-7/8"
(250mm)
7"
(178mm)
6"
(151mm)
2-7/16"
(62mm)
1-3/4"
(45mm)
MTG.
SURFACE
MAX 2"
(51mm)
25-3/4"
(655mm)
1-1/4" O.D.
(32mm)
3/8" (10mm)
SUPPLIES
7" MAX.
(178mm)
NOTE: MOUNTING HOLE
ARE 1-3/8" DIA. (35mm)