aquabrass

niu 67785

floormount tub filler with handshower

FEATURES

Solid brass construction
Single volume and temperature control
Cascading water flow
Single spray handshower
5` reinforced PVC hose
pull-button diverter
Ceramic cartridge # ABCA67788
1/2" connection

FINISHES

Standard
polished chrome (pc)
Custom
20 custom finishes available
(ask your local Aquabrass authorized dealer for details)

WARRANTY

Residential: Limited lifetime warranty to original purchaser
Commercial: Two years warranty
(Complete warranty available at www.aquabrass.com/warranty)

SPECS AT LARGE

Overall spout projection: 10 1/4"
Total faucet height: 38 9/16"
Flow rate tub filler: 10.8 gpm
Flow rate handshower: 2.5 gpm

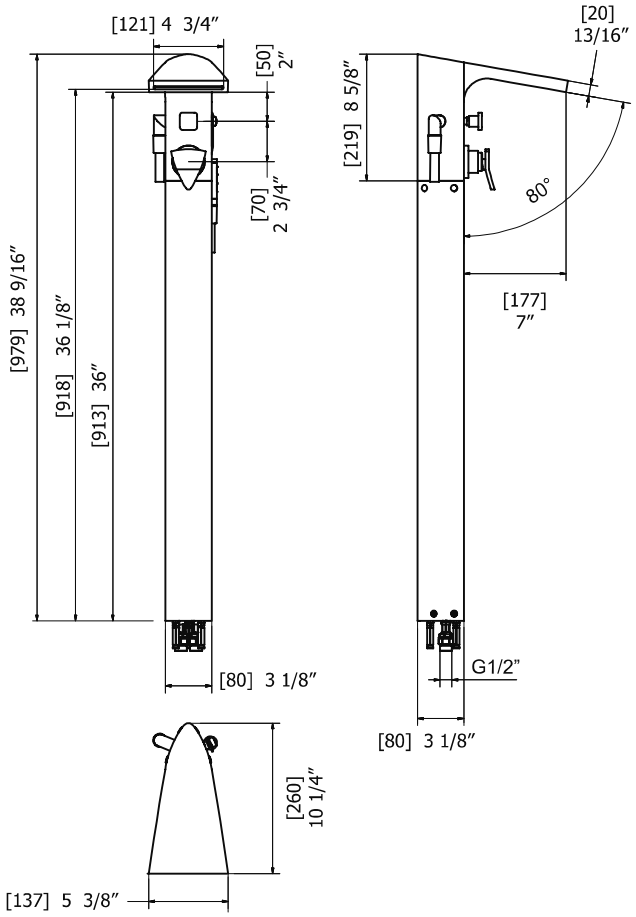

Products and specifications shown are subject to change without notice. Please contact our technical support at tech@aquabrass.com for any further queries, replacement parts requests etc.

aquabrass

niu 67785

floormount tub filler with handshower

EXPLOSION PARTS

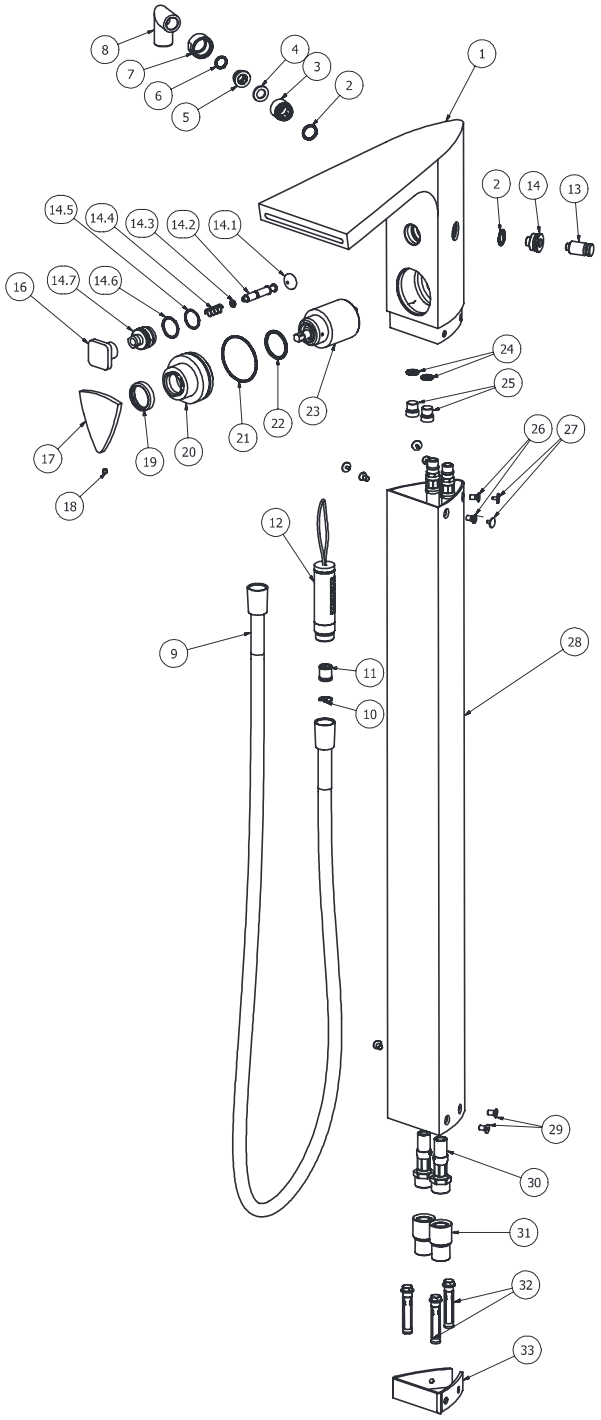

Products and specifications shown are subject to change without notice. Please contact our technical support at tech@aquabrass.com for any further queries, replacement parts requests etc.