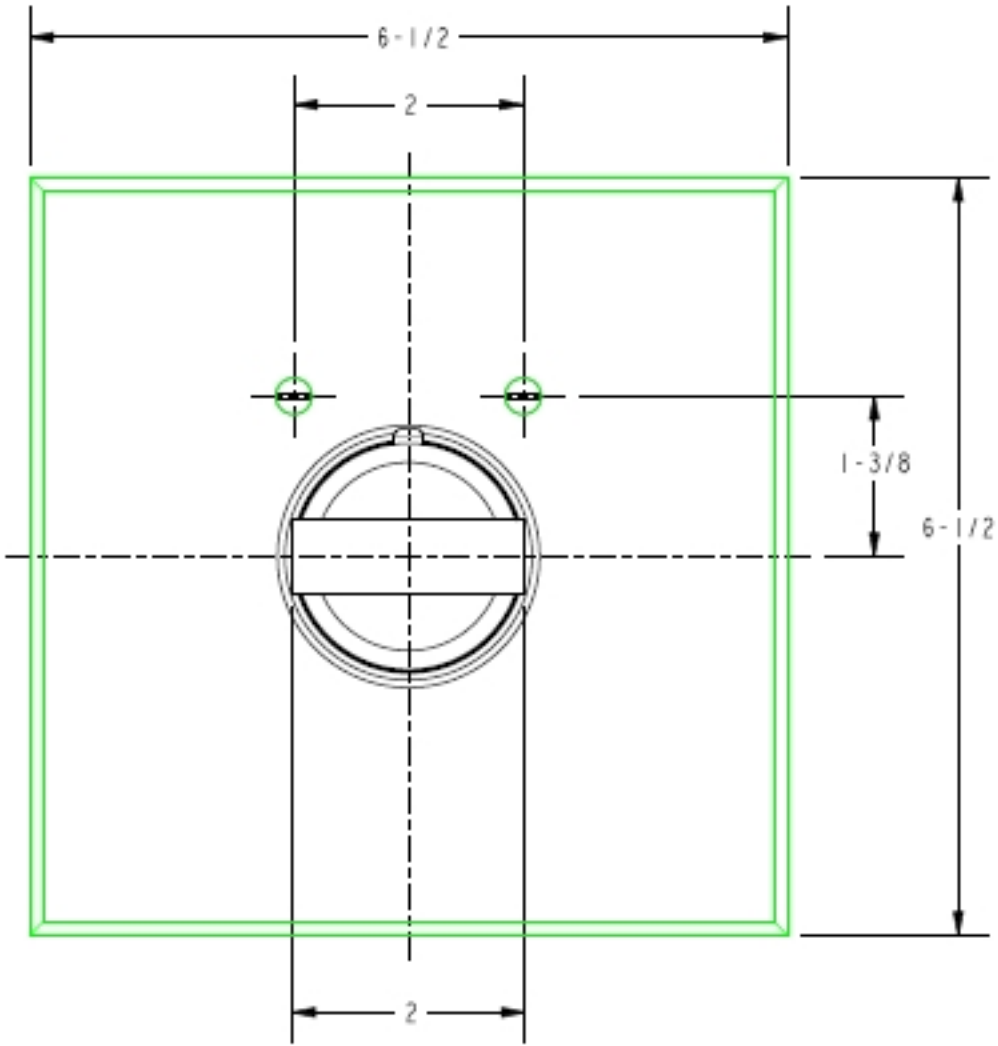
6-1/2
2
1-3/8
6-1/2
2

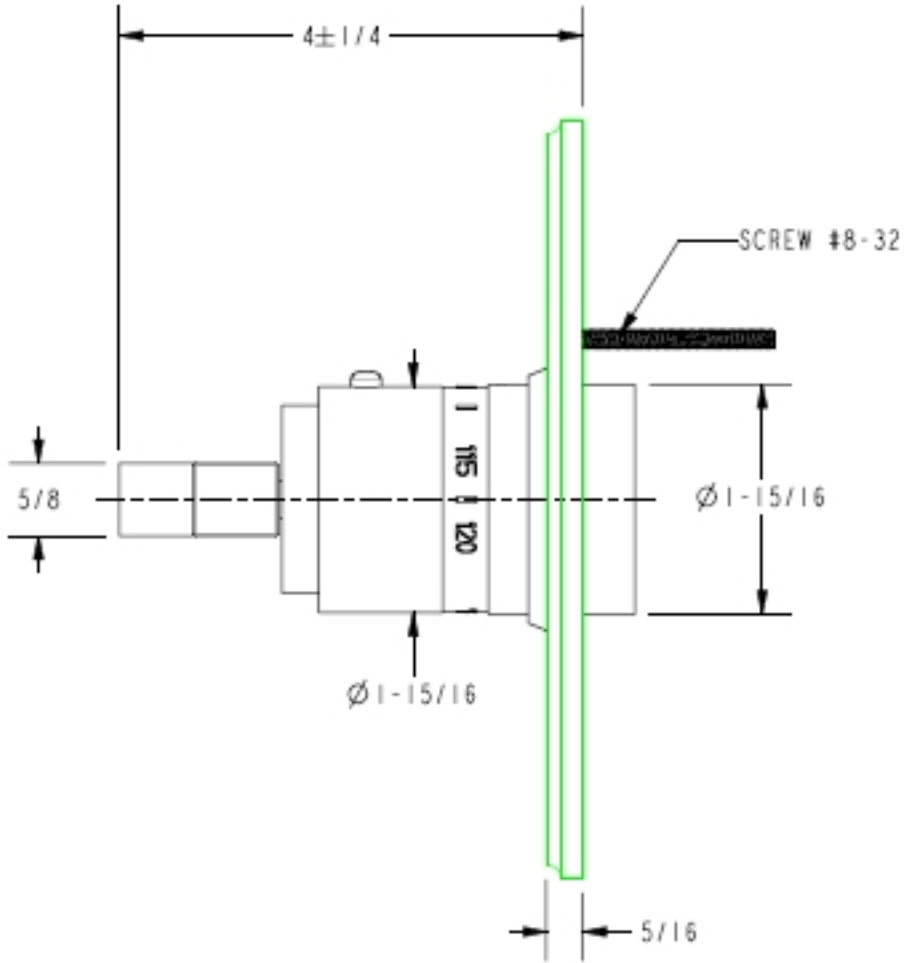
4±1/4
SCREW #8-32
5/8
Ø1-15/16
Ø1-15/16
5/16