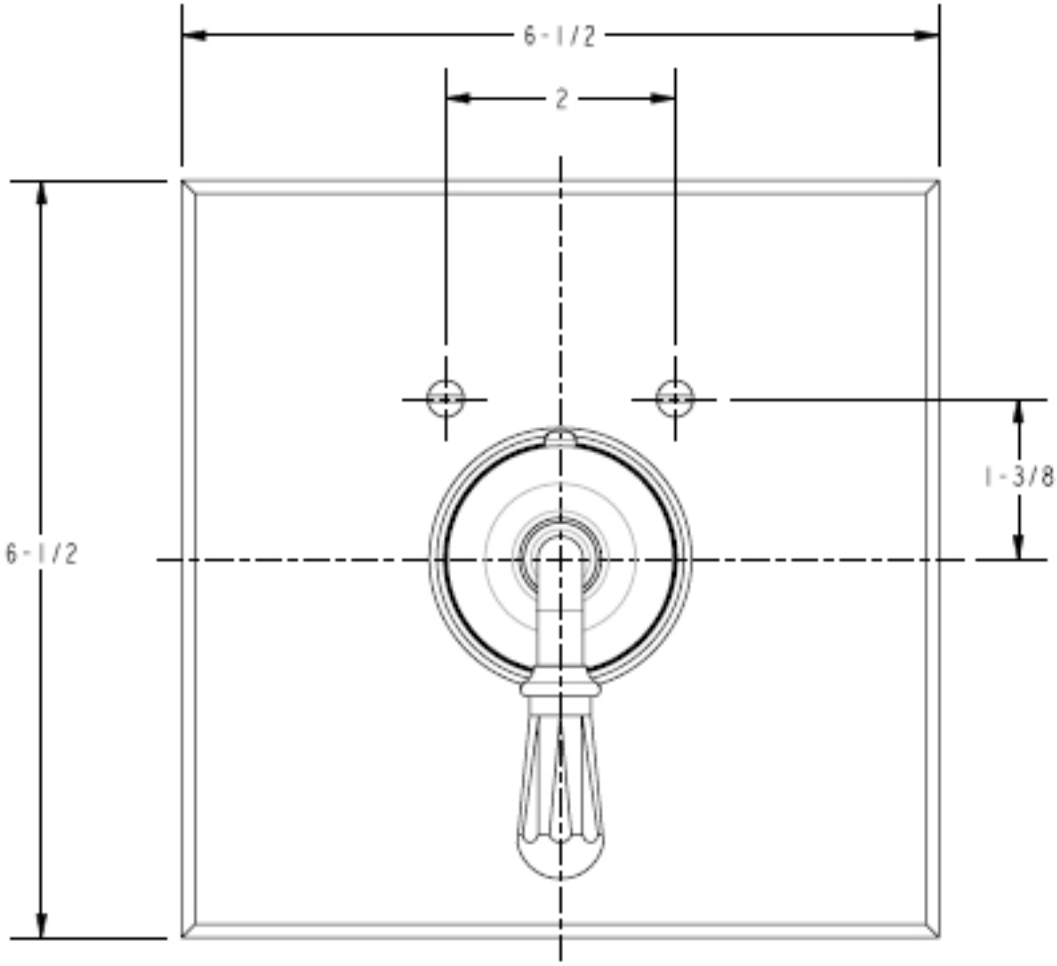
6-1/2
2
6-1/2
1-3/8

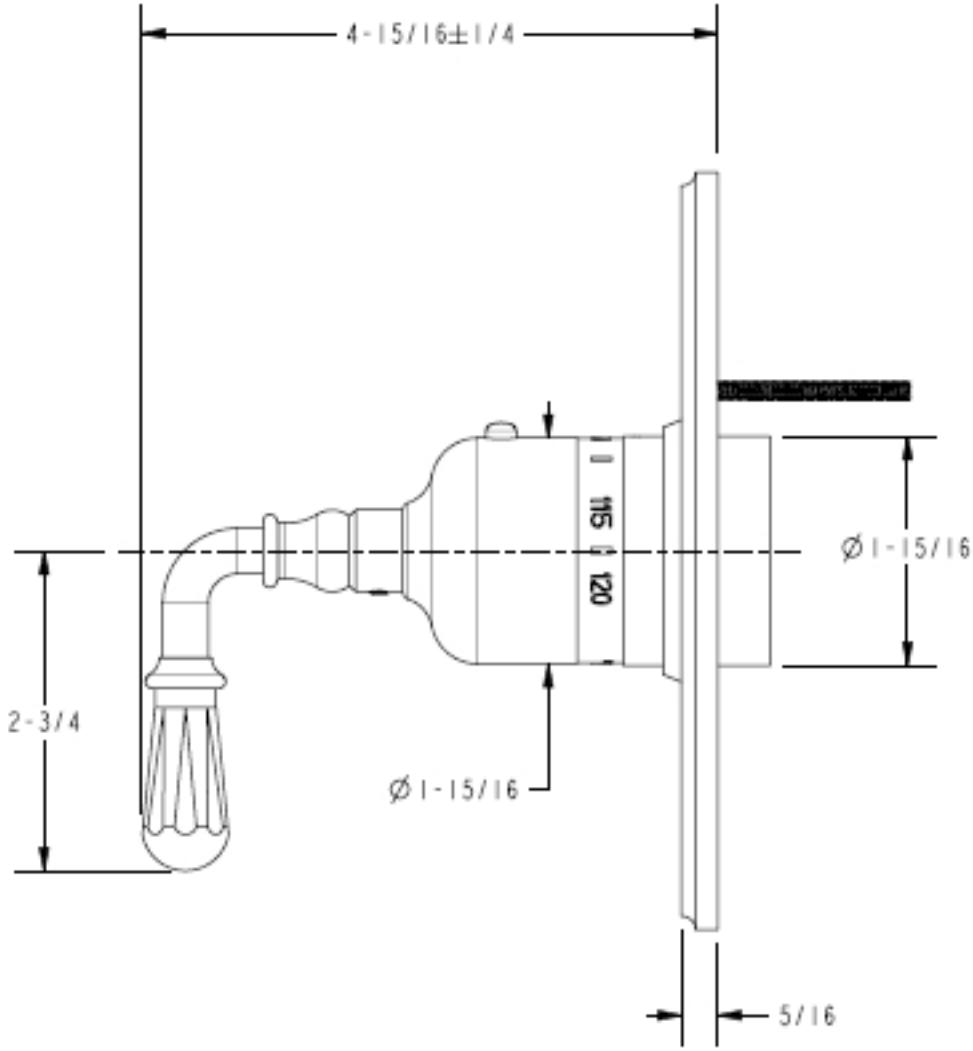
4-15/16±1/4
145
120
Ø1-15/16
2-3/4
Ø1-15/16
5/16