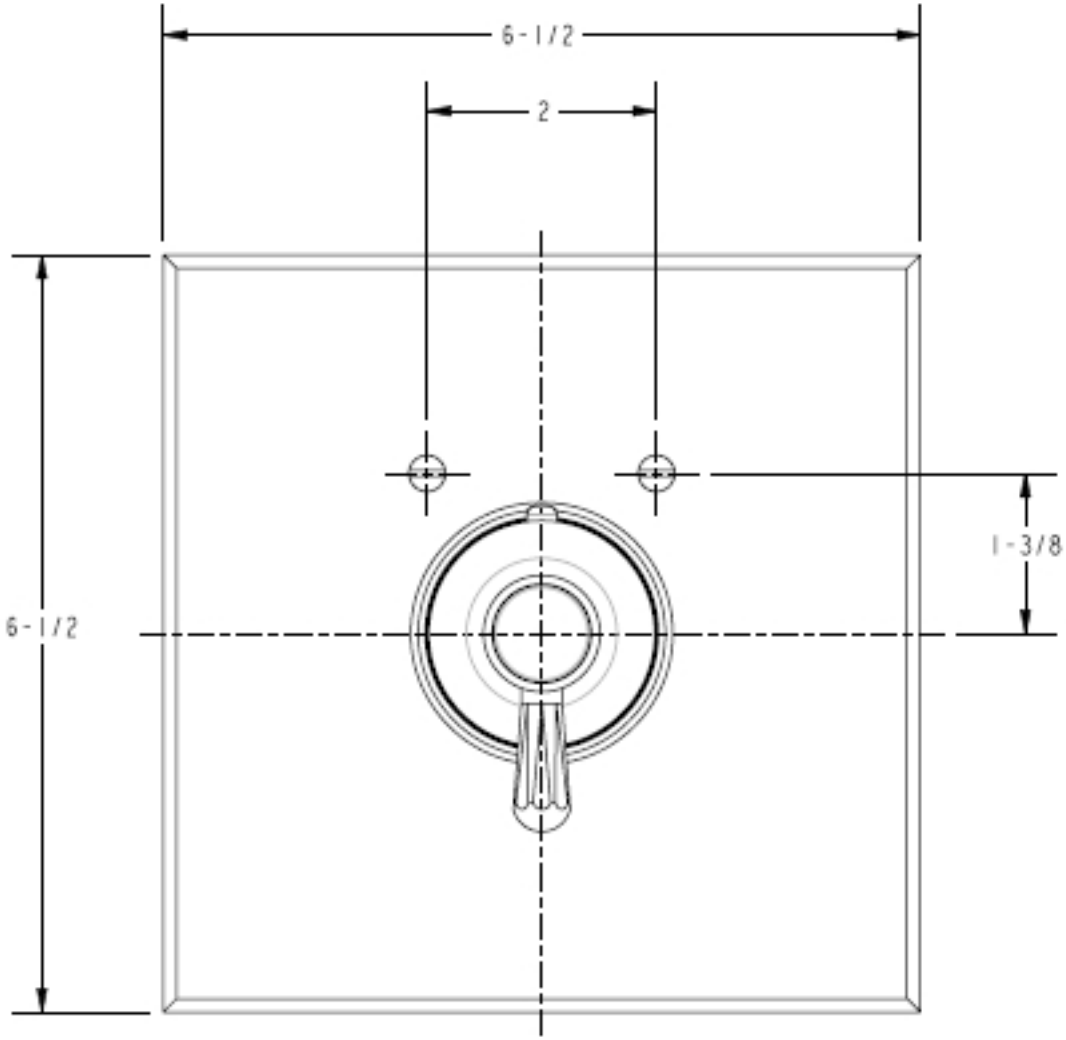
6-1/2
2
6-1/2
1-3/8

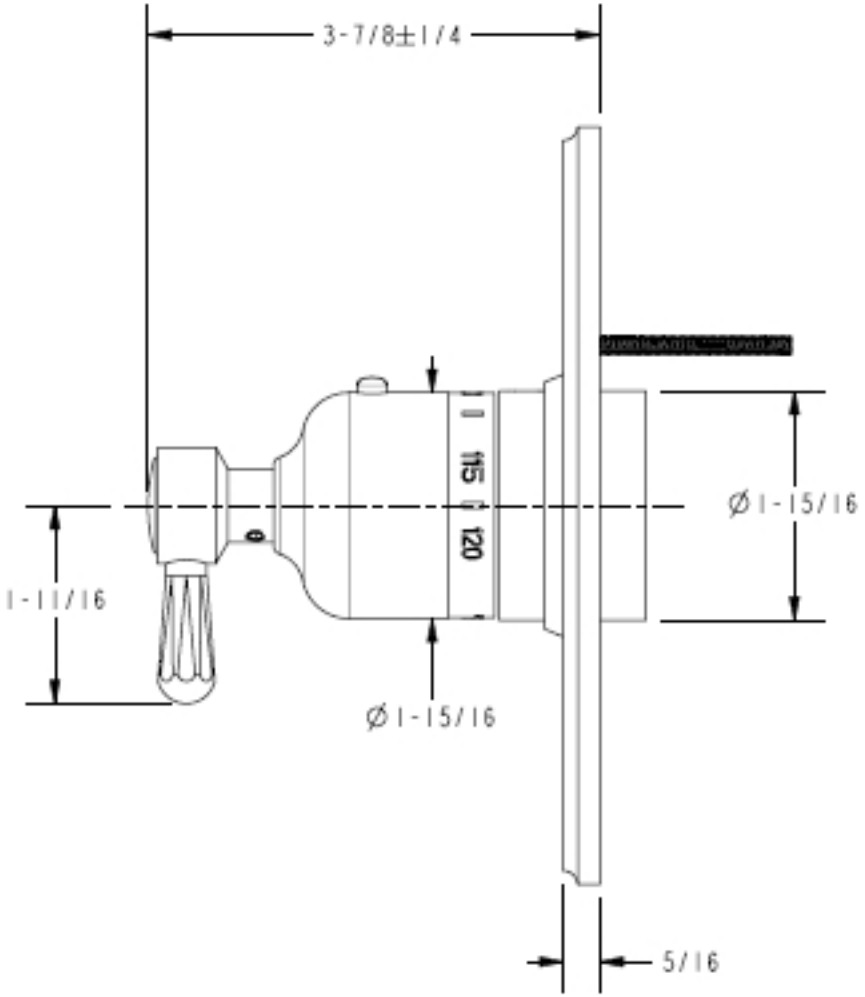
3-7/8±1/4
Ø1-15/16
1-11/16
Ø1-15/16
5/16