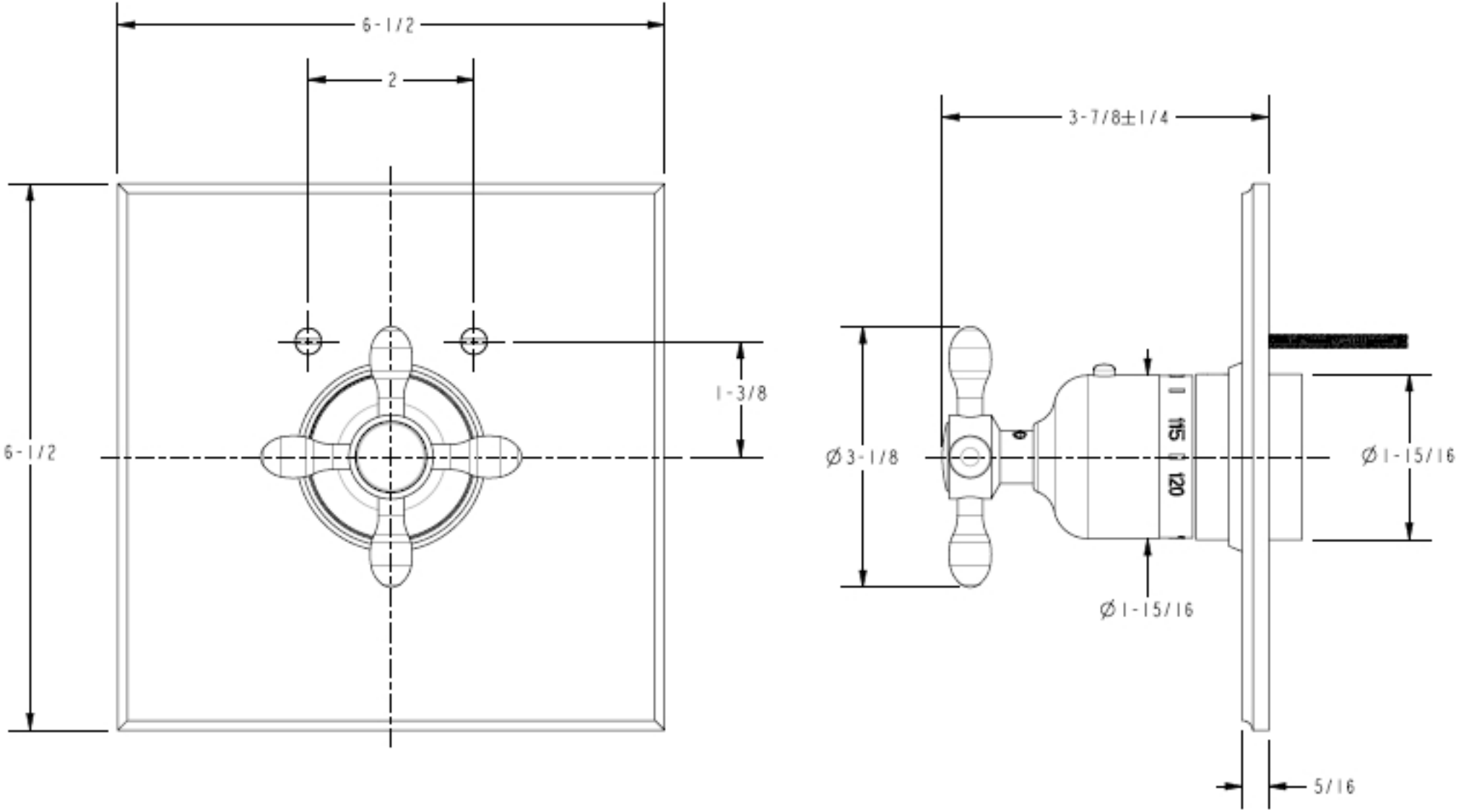
6-1/2
2
6-1/2
1-3/8
3-7/8±1/4
Ø3-1/8
Ø1-15/16
Ø1-15/16
5/16
MS
120