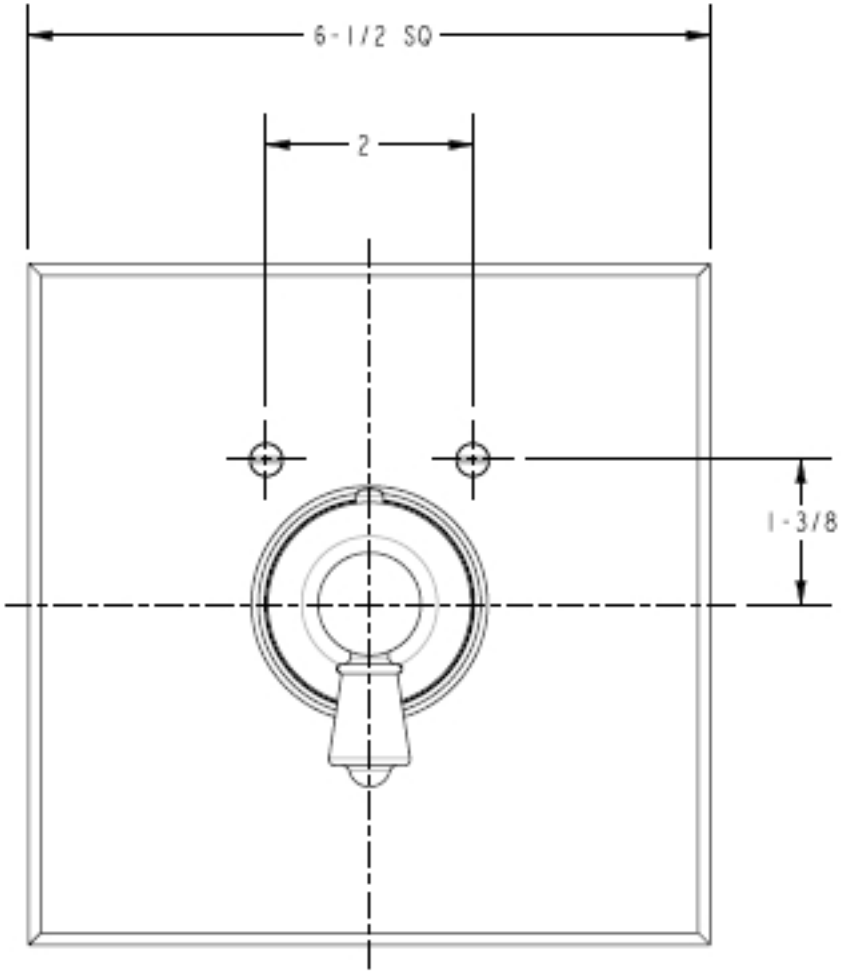
6-1/2 SQ
2
1-3/8

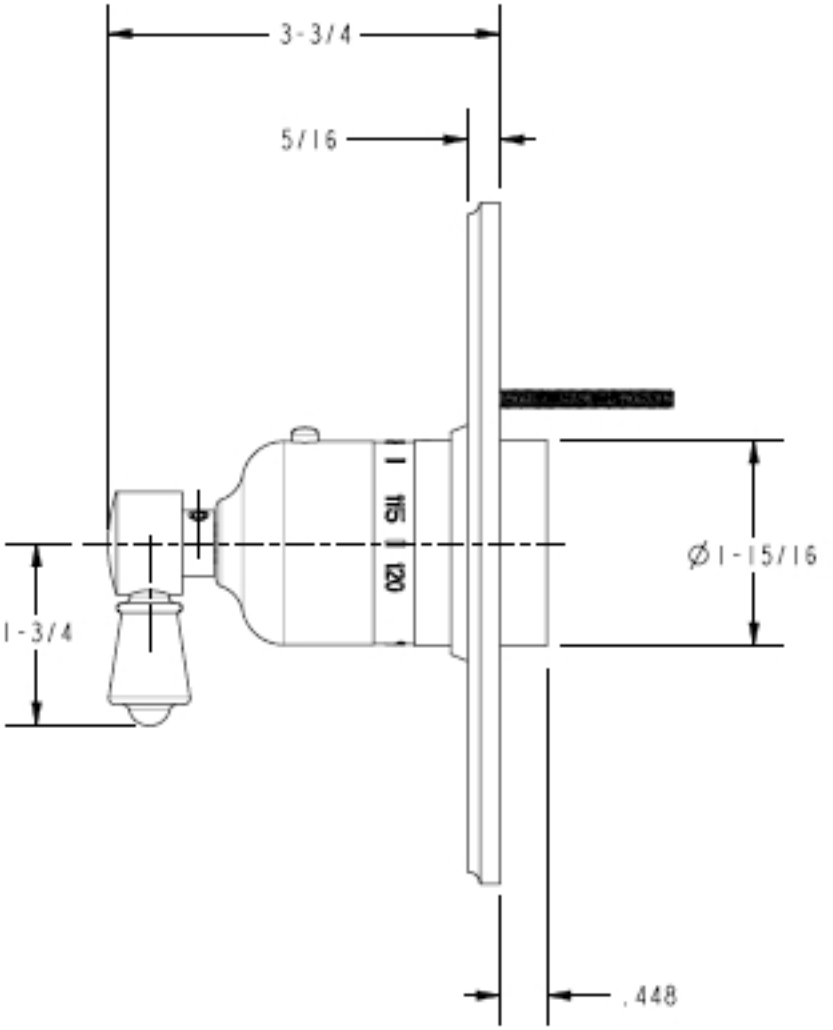
3-3/4
5/16
1-3/4
Ø1-15/16
.448