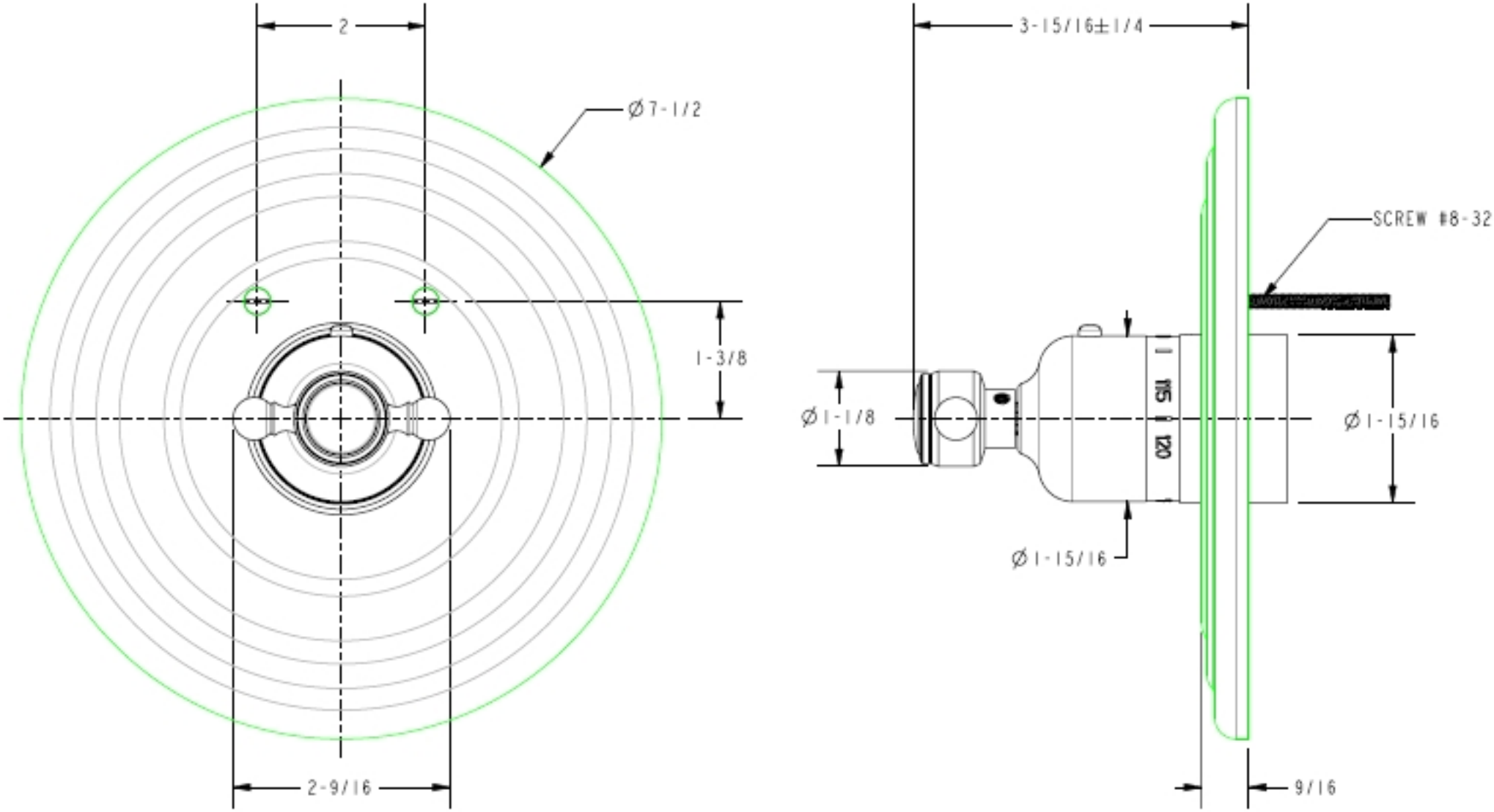
2
Ø7-1/2
1-3/8
2-9/16
3-15/16±1/4
SCREW #8-32
Ø1-1/8
Ø1-15/16
Ø1-15/16
9/16