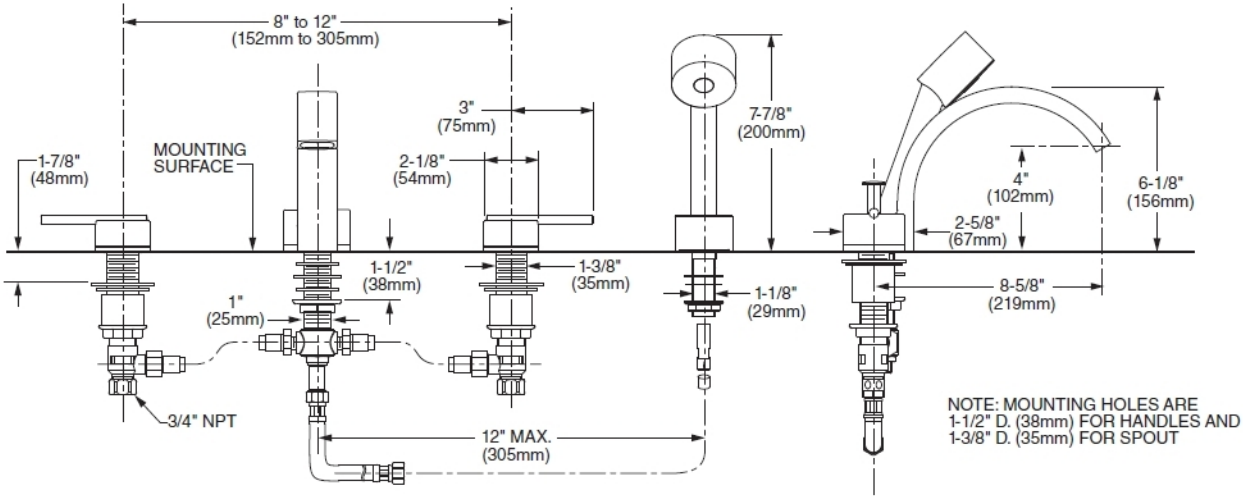
8" to 12"
(152mm to 305mm)
1-7/8"
(48mm)
MOUNTING
SURFACE
3"
(75mm)
2-1/8"
(54mm)
7-7/8"
(200mm)
4"
(102mm)
6-1/8"
(156mm)
2-5/8"
(67mm)
1-1/2"
(38mm)
1-3/8"
(35mm)
1-1/8"
(29mm)
8-5/8"
(219mm)
1"
(25mm)
3/4" NPT
12" MAX.
(305mm)
NOTE: MOUNTING HOLES ARE
1-1/2" D. (38mm) FOR HANDLES AND
1-3/8" D. (35mm) FOR SPOUT